BOQ: STANDARD TECHNICAL NOTES & SCOPE

	Following also forms the scope of ETC work in addition to above, but not limited to this.
1	Loading / Unloading, material verification, up keeping of records, handling, shifting to & from stores, proper storage, assembly, installation, pre-commissioning test and commissioning tests (As per Customer/BHEL FQP) are included in the scope. Necessary skilled electrician & labour to be provided by ETC contractor to OEM during testing & commissioning. The storage instructions of the equipment manufacturer/ Employer shall be strictly adhered to. Customer/BHEL Field Quality Plan shall be followed alongwith the provision of Technical Specification for storage.
2	All the drawings and documents as per **Annexure-1** shall be followed for ETC work.
3	**Annexure- 4** (Switchyard Erection guidelines) shall be followed for ETC work.
4	Bidder Supplied Material - Bidder to offer items from Customer approved make only (as applicable). Bidder to supply material of proven design and make, which have already been extensively used and tested. Bidder to obtain approval from BHEL Engineer incharge / Customer prior to supply. Quantity of supply items are provisional and shall be finalised during contract stage. Qty of supply item may vary upto any extend and and even may get deleted.
5	All **consumables** required for sucessful erection testing & commissioning of present scope of work is in bidders scope, such as (not limited to) Welding Electrodes, Low hydrogen content welding electrode, Ferruls, Cable Lug, cable ties, , Paint, bitumen compound, Zinc riched enamel paint, red oxide and zinc chromate ..etc complete in all respect.
6	**ETC of Power / Control / Instrument Cable:** Scope includes Cable Laying tagging , dressing, ferruling, lugging, installation of cable gland, soldering, tapping, jointing, crimping, termination, and drilling/ cutting holes in cable gland plates- laying can be either on trays, hanger, supports, underground, buried in ground or through GI/PVC pipe over/under ground, through wall etc. All erection materials viz. Cable Lug, ferrules, cable ties / straps, Al. tags, route markers, GI / PVC wall sleeves with rubber / nylon bushes etc shall be supplied by bidder. excluding supply of Cable Gland which are covered separately (as a separate BOQ item / free supply by BHEL). Machine ferruling shall be adopted.
7	**CABLE LUG:** Supply of cable lug is in bidders scope. cable lugs shall be tinned copper solderless crimping type conforming to IS-8309 & 8394 for all control Cables and cables with copper wire. For Aluminium Bimetallic lugs for power cables as required shall beused depending upon type of cables and terminations. Solderless crimping of terminals shall be done by using corrosion inhibitory compound. The cable lugs shall suit the type of terminals provided. The bidder shall cover the exposed part of all cable lugs whether supplied by him or not with insulating tape, sleeve or paint. Bidder to supply cable lug from manufacturer's authorised representative / dealer. Make of cable lug is to be approved by Customer.
8	**Cable TAGS & Markers -** Bidder to supply and install cable tag & markers. The tag shall be of aluminium with the number punched on it and securely attached to the cable conduit by not less than two turns of 20 SWG GI wire conforming to IS:280. Cable tags shall be of rectangular shape for power cables and of circular shape for control cables.
9	**Cable Gland:** Tin/ Nickel, Nichel/chromium - Plated (coating thickness not less than 10 microns) Customer approved make brass cable glands, double compression heavy-duty type complete with necessary armour clamp & tapered washer etc. Bidder to offer the gland from authorised representative of manufacturer. Cable gland shall be subject to customer approval prior to dispatch. Cable glands shall match with the sizes of different HT/LT/Control cables.
10	Power and control cables shall be securely fixed to the trays/supports with self locking type nylon ties with de-interlocking facility at every 5 metre interval for horizontal run. Vertical and inclined cable runs shall be secured with 25 mm wide and 2 mm thick aluminium strip clamps at every 2m.
11	Vertical run of cables on equipment support structure shall be supported on perforated cable trays of suitable width which shall be suitably bolted/clamped with the equipment support structure. Tray shall be supplied by BHEL.
12	**Insulating Rubber Mats -** The scope covers supply and laying of insulating mats of class-A conforming to IS: 15652-2006. These insulating mats shall be laid in front of all floor mounted ACDB, CRP, SAS (As applicable under present scope) in control room building/ Switchyard panel room. The insulating mats shall be made of elastomer material free from any insertions leading to deterioration of insulating properties. It shall be resistant to acid, oil and low temperature. Upper surface of the insulating mats shall have small aberration (rough surface without edges) to avoid slippery effects while the lower surface shall be plain or could be finished slip resistant without affecting adversely the dielectric property of the mat. The Insulating mat shall be of pastable type, to be fixed permanently on the front of the panels except for the chequered plate area which shall not be pasted as per requirement. The insulating mats shall generally be fixed and joints shall be welded as per recommendations in Annexure-A of IS:15652. Width of insulating mats shall generally be of 1.5 meters or as per site requirements. Length shall be supplied as per site requirements.
13	Cable ends shall be kept sealed to prevent damage. In cable vault, fire resistant seal shall be provided underneath the panels. Wherever cable pass through floor or through wall openings or other partitions, GI/PVC wall sleeves with bushes having a smooth curved internal surface so as not to damage the cable, shall be supplied, installed and properly sealed by the Contractor at no extra charges.
14	All welding done at site for equipment and structures, shall be painted with zinc rich paint immediately to avoid corrosion.

BOQ: STANDARD TECHNICAL NOTES & SCOPE

15	Supply of 110 MM & 50mm dia. **PVC PIPES CLASS-IV** PIPES including Bend and Tee etc shall be as per technical specification TB-XXX-316-041. (Supply of PVC Pipe (class 4) as per IS 4985, alongwith accessories like sockets, bends, tees etc, Customer accepted make.)
16	Supervision of testing and commissioning of Relay / Prtoection / SAS / Automation / Bus Bar Panes (as applicable) is in the scope of BHEL/ panel supplier. Necessary manpower support, tools, tackles and testing equipment to be in scope of ETC contractor
17	Minor Civil works such as modification of civil foundations, making holes in the trenches/ control room building, grouting, fixing of trench material will be in the scope of ETC contractor. Also Minor Civil Works for Repair/Modification work in Control room for fixing of panels under present scope including covering of gap and floor finishing to meet the aesthetic will be in the scope of ETC contractor..
18	Removal of gravel, if gravelling is already done, for connection of Equipment earthing strip to the existing mat (wherever earthing mat is already laid), and after completion of earthing , contractor should place the gravel to bring it in original shape.
19	Completete ETC package is under the scope of bidder. All T&P required to complete the job shall be provided by bidder only. Bidder to arrange MAN LIFTER for 400kV equipment erection & testing. Height of manlifter shall be 8m approach for 400KV Yard.
20	FIRE PROTECTION SYSTEM (material handling) - Receipt of material, unloading, proper storage, material reconciliation, safe keeping handing over to BHEL / Customer is in bidders scope. Mode of payment shall be made on unit weight basis in BOQ item "FIRE PROTECTION SYSTEM (material handling)".
21	Quoted rates are deemed to be inclusive of miscellaneous works viz erection of clamps and connectors.
22	All paint, welding electrodes & other consumable by contract supplies shall be part of ETC works. Paint /welding electrode make etc. is subject to BHEL/CUSTOMER site incharge approval.
23	Equipment erection (say Isolator) means complete erection, metallics, post insulator, connectors (expansion/rigid tubular for Al.Tube / single/double/quadraple conductor), connection to the next in line (if connected to overhead busbar or droppers) including PG clamps/Tee connectors etc. This will be clear from the enclosed electrical layout drawings.
24	Equipment and tower erection would include supply and erection of miscellanneous items, viz Phase colour discs, labels painting of equipments, phase colour painting, phase marking, bay identification board, danger plates, rubber mats, device number marking on the equipment, keyboard etc as per site requirements. Supply & Mounting of phase color discs & Danger plates shall be as per IS-2551; 1982 & IS 5; 1978.
25	Welding of Aluminium tubes (supply of welding sleeve excluded) as per **Annexure-5** is in ETC contractor's scope and joints shall be tested by radiography. Welding and Bending machines and any other equipment will be in ETC Contractor scope.
26	Completete ETC package is under the scope of bidder. All TNP including oil filterating machine, cranes etc. required to complete the job shall be provided by bidder only.
27	Supervision of erection, Testing & commissioning of one no. Isolator of each type shall be done by supplier. Necessary menpower support, tools, tackles etc shall be in the scope of ETC contractor.
28	Testing instruments (dully calibrated) have to be arranged by ETC Contractor at it's own cost (List is only provided for information , if any other instrument not mentioned below but required for sucessful completion of ETC work shall be in ETC contractor's scope), (However OMICRON or equivalent kit for Numerical relay testing shall be arranged by BHEL). Bidder to submit valid calibration certificate during commencement of testing / commissioning works.
28.01	DCRM (OPERATIONAL ANALYZER)
28.02	Contact Resistance Measurement kit (CRM)
28.03	Capacitance and Tan delta measurement Kit
28.04	Dew Point Measurement kit
28.05	5kV/1kV Megger
28.06	Primary current Injection Kit
28.07	Secondary current/Voltgae Injection kit
28.08	1Ph Variac
28.09	Multimeters
28.10	Clamp on meter
28.11	Relay test kit
29	The scope os supply items as mentioned in the above BOQ are tentative. Items shall be supplied by contractor as per exact site requirement only.
30	For scope of supply items in ETC contractor scope following should be followed-
	i. The approval of makes shall be obtained from BHEL/Customer. ii. Drawings and MQP shall be submitted for approval in line with specification and relavent IS. iii. Quality- Inspection and dispatch clearance shall be given by BHEL/Customer.

Annexure – 1

List of Documents (400kV Switchyard at Sagardighi unit5 project) -

Sl No	Doc No.	Description	Pages
1	TB-DG-445-316-E001	Single Line Diagram of 400kV Switchyard	1
2	TB-DG-445-316-E002	400kV Switchyard Layout drawing	1
3	TB-DG-445-316-E003	Sectional Elevation of 400kV Switchyard	1
4	TB-DG-445-316-E005	Cable Trench Layout for 400kV Switchyard	1
5	TB-DG-445-316-E008	Panel Placement & Trench Layout in LT switchgear room.	4
6	TB-DG-445-316-E010	Panel Placement & Trench Layout in Battery cum DCDB room.	3
7	TB-DG-445-316-E012	Equipment earthing drawings	24
8	TB-DG-445-316-E013	Panel Placement & Trench Layout in Bay control room.	2

FIRST ANGLE PROJECTION (ALL DIMENSIONS ARE IN MM.)

DRAWING No. TB-DG-445-510-M001

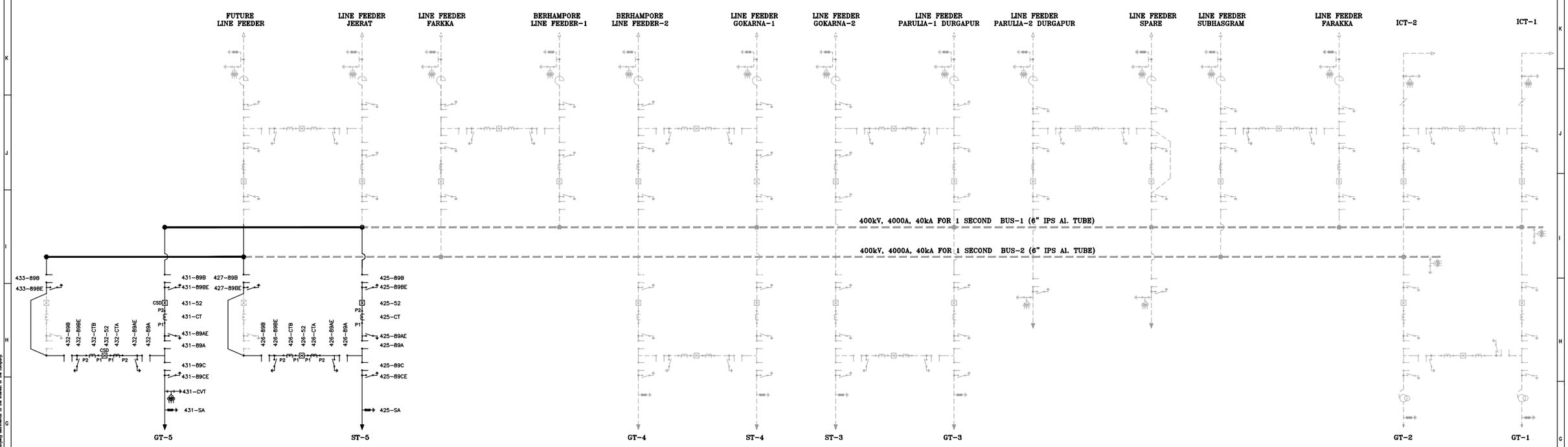

BILL OF QUANTITY (MAIN EQUIPMENT) :-

S.L.	ITEM DESCRIPTION	kV	QTY.	SYMBOL
1.	3150A,3-PH ,50kA FOR 3 SEC, SF6 CB SUITABLE FOR 1ø & 3ø OPERATION WITHOUT CLOSING RESISTOR WITH CONTROLLED SWITCHING DEVICE (CSD).	420	02	CSD
2.	3150A,3-PH ,50kA FOR 3 SEC, SF6 CB SUITABLE FOR 1ø & 3ø OPERATION WITHOUT CLOSING RESISTOR WITHOUT CONTROLLED SWITCHING DEVICE (CSD).	420	02	
3.	2000A,3-PH, 50KA FOR 3 SEC, HCB ISOLATOR(ELECTRICALLAY GANGED MOTOR & MANUAL OPERATED) WITH 1E/S (MECHANICALLY GANGED MANUAL OPERATED).	420	12	
4.	2000 A, 50KA FOR 3 SEC, 6 CORE CURRENT TRANSFORMER, 120% EXTENDED CURRENT 1 PH.	420	18	
5.	4400+10%,-5% pF,3 WINDING CVT 50KA FOR 3 SEC, 1PH.	420	03	
6.	SURGE ARRESTER(METAL OXIDE GAPLESS TYPE) 1-PH. 10kA CLASS-3	360	06	

CT DETAILS:-

CORE No.	APPLICATION	RATIO	BURDEN	KPV (MIN)	I_E AT VK (MAX)	R_{CT} (MAX AT 75 C)	ACCURACY CLASS
CORE 1	BUS DIFFERENTIAL MAIN	2000/1A 1000/1A 500/1A	-	2000 V 1000 V 500 V	30mA ON 2000/1 tap 60mA ON 1000/1 tap 120mA ON 500/1 tap	10 Ω 5 Ω 2.5 Ω	PS
CORE 2	BUS DIFFERENTIAL CHECK	2000/1A 1000/1A 500/1A	-	2000 V 1000 V 500 V	30mA ON 2000/1 tap 60mA ON 1000/1 tap 120mA ON 500/1 tap	10 Ω 5 Ω 2.5 Ω	PS
CORE 3	METERING	2000/1A 1000/1A 500/1A	40VA 40VA 40VA	- - -	- - -	- - -	0.2S,ISF<5
CORE 4	SPARE	2000/1A 1000/1A 500/1A	40VA 40VA 40VA	- - -	- - -	- - -	0.2S,ISF<5
CORE 5	TRANSF. BACKUP/LINE BACKUP PROTECTION	2000/1A 1000/1A 500/1A	-	4000 V 2000 V 1000 V	30mA ON 2000/1 tap 60mA ON 1000/1 tap 120mA ON 500/1 tap	10 Ω 5 Ω 2.5 Ω	PS
CORE 6	TRANSF. DIFFL./LINE PROTECTION	2000/1A 1000/1A 500/1A	-	4000 V 2000 V 1000 V	30mA ON 2000/1 tap 60mA ON 1000/1 tap 120mA ON 500/1 tap	10 Ω 5 Ω 2.5 Ω	PS

GT CVT DETAILS:-

	PARTICULARS	SEC 1	SEC 2	SEC 3
400kV CVT 4400pF	RATIO	$\frac{400kV}{\sqrt{3}} / \frac{110V}{\sqrt{3}}$	$\frac{400kV}{\sqrt{3}} / \frac{110V}{\sqrt{3}}$	$\frac{400kV}{\sqrt{3}} / \frac{110V}{\sqrt{3}}$
	APPLICATION	PROTECTION	PROTECTION	METERING
	BURDEN	100 VA	100 VA	100 VA
	ACCURACY CLASS	3P	3P	0.2

REFERENCE

400kV SINGLE LINE DIAGRAM
DRG. 12A05-DWG-E-0002

PLOT PLAN FOR 400 kV SAGARDIGHI SUBSTATION
DRG. PE-DG-445-100-M001

NOTES:-

01) UNIT5 SWYD SYSTEM: 400KV 50kA FOR 1SEC.
02) EQUIPMENT: 400KV 50kA FOR 1 SEC.
03) CREEPAGE: 31mm/kV.
04) SYSTEM SHALL BE SOLIDLY GROUNDED.

LEGEND TABLE

——————— PRESENT BHEL SCOPE
- - - - - - - - FUTURE/EXISTING SCOPE

COPY RIGHT AND CONFIDENTIAL
The information on this document is the property of BHARAT HEAVY ELECTRICALS LIMITED
It must not be used directly or indirectly in a manner detrimental to the interest of the company.

COMPUTER DRG. PATH NAME :
REF. DRG. No.
SIGN. & DATE
INVENTORY No.

REV.	DATE	ALTERED / CHECKED / APPROVED	ZONE

ADDITIONAL INFORMATION
W.O.No.
STATUS OF DRAWING
DISTRIBUTION OF PRINTS

NAME OF CUSTOMER/PROJECT: WEST BENGAL POWER DEVELOPMENT CORPN. LTD.
SAGARDIGHI THERMAL POWER STATION 1 X 660 MW
PHASE -III, EXTENTION UNIT # 5

NAME OF CONSULTANT: DEVELOPMENT CONSULTANTS PRIVATE LIMITED KOLKATA

BHARAT HEAVY ELECTRICALS LTD.
TRANSMISSION PROJECTS DIVISION

	/NAME	/SIGN.	/DATE
MADE BY	NKY		04.08.20
CHECKED BY	NKY/SKS		
APPROVED BY	SKS		

DEPT. / SCALE NTS / CARD CODE / CODE

/TITLE: SINGLE LINE DIAGRAM FOR 400kV SAGARDIGHI SUBSTATION

/DRAWING NO. TB-DG-445-510-E001 /REV. 01

/SHEET No. 01 /NEXT SHEET —

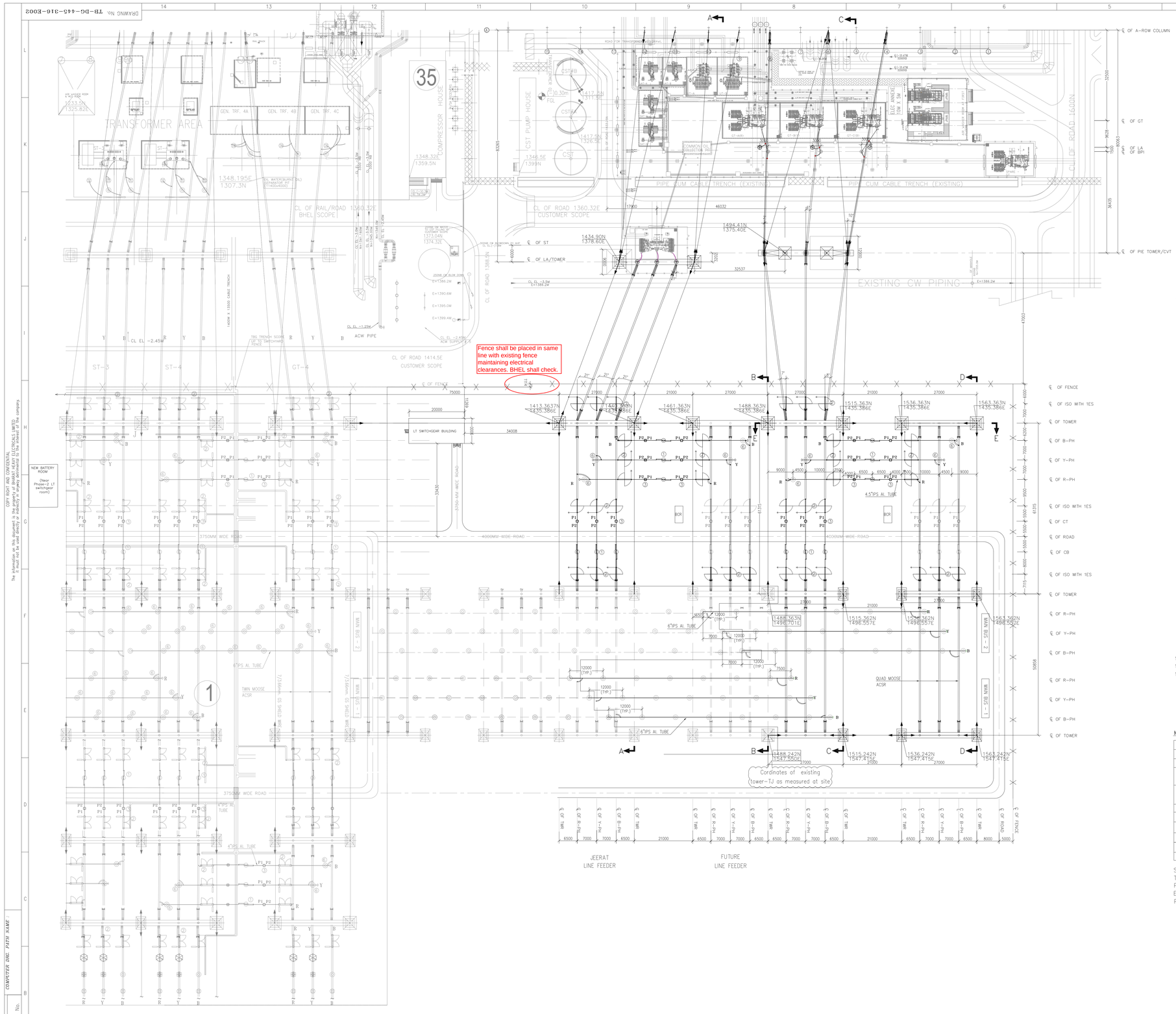

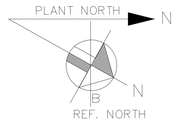

ITEM CODE	DESCRIPTION	SYMBOLS	QUANTITY IN NOS.
1.	420kV, 3150A, 3-PHASE, 50 kA FOR 3 Sec. SF6 CIRCUIT BREAKERS SUITABLE FOR SINGLE AND 3-PHASE OPERATION.		04
2.	420kV, 2000A 3-PHASE, HDB ISOLATOR (ELECTRICALLY GANGED MOTOR & MANUAL OPERATED) WITH ONE E/S (ELECTRICALLY GANGED MANUAL OPERATED)		12
3.	420kV, 1-PHASE, 6 CORE CURRENT TRANSFORMER		18
4.	420kV, 4400+10%,-5% pF, $\frac{400}{\sqrt{3}}$ / $\frac{0.110}{\sqrt{3}}$ / $\frac{0.110}{\sqrt{3}}$ / $\frac{0.110}{\sqrt{3}}$ kV, 1-PHASE , 3 CORE CAPACITOR VOLTAGE TRANSFORMER		03
5.	360kV, 1-PHASE SURGE ARRESTERS,10KA,CLASS-3 (UPPER HEIGHT LOCATED IN TRANSFORMER YARD)		06
6.	420kV, 1-PHASE BUS POST INSULATOR (LOWER HEIGHT)		50
7.	420kV, 1-PHASE BUS POST INSULATOR (UPPER HEIGHT LOCATED IN TRANSFORMER YARD)		03

NOTE :-

1. ALL DIMENSIONS ARE IN mm UNLESS OTHERWISE SPECIFIED.
2. SYSTEM PARAMETERS-

S. NOS.	DESCRIPTION	UNIT	
1.	NOMINAL SYSTEM VOLTAGE	kV	400
2.	HIGHEST SYSTEM VOLTAGE	kV	420
3.	BASIC LIGHTNING IMPULSE LEVEL	kVP	1425
4.	POWER FREQUENCY WITHSTAND	kVrms	630
5.	SWITCHING IMPULSE WITHSTAND VOLTAGE (PHASE TO EARTH)	kVrms	1050
6.	SWITCHING IMPULSE WITHSTAND VOLTAGE (PHASE TO PHASE)	kVrms	1575
7.	CREEPAGE DISTANCE (MINIMUM)	mm/kV	31
8.	FAULT LEVEL FOR 1 SEC(FOR UNIT-5 SWITCHYARD)	kA	50
9.	MINIMUM CLEARANCES PHASE TO PHASE	mm	4200
10.	MINIMUM CLEARANCES PHASE TO EARTH	mm	3400

3.CONDUCTOR DETAIL:-

S. NOS.	DESCRIPTION	
1.	MAIN BUS	6"IPS (EH) Al. TUBE OD=170.00mm ID=154.00mm
2.	EQUIPMENT INTERCONNECTION	4.5"IPS Al. TUBE (OD=120, ID=96)/QUAD MOOSE ACSR
3.	JUMPER /DROPPERS	QUAD MOOSE ACSR (OD=31.77mm)
4.	SHIELD WIRE	7/4.00 (7/8 SWG) GALVANISED STEEL (12 mm DIA)

4. ALL THE BUS BARS AND STRUNG BUSES ARE PROTECTED FROM 7/4.00 GALVANISED STEEL WIRE.
5. ROAD INSIDE SWITCHYARD FENCE SHALL BE IN TBG SCOPE.
6. ALL SWITCHYARD EQUIPMENTS STRUCTURE SHALL BE LATTICE TYPE.
7. THE TOP OF THE BOLT OF LA & BPI (COMING NEAR GENERATOR/STATION TRANSFORMER YARD) FOUNDATION SHALL BE LOWER BY 15MM THAN THE TOP OF RAIL, THIS IS TO FACILITATE THE REMOVAL OF LA & BPI STRUCTURE DURING TRANSFORMER TO BE TAKEN OUT FOR REPAIR/ REPLACEMENT.
8. FLOOD LIGHT FOR ILLUMINATION SHALL BE MOUNTED SEPARATELY ON HIGH MAST.
9. SEPARATE DRAWING SHALL BE REFERRED FOR ERECTION KEY DIAGRAM, TRENCH LAYOUT, EARTHMAT LAYOUT, SWITCHGEAR ROOM, TOWER/ BEAM, FIRE FIGHTING SYSTEM, ILLUMINATION SYSTEM, AIR CONDITIONING & VENTILATION SYSTEM, FENCE, GRAVEL ETC.
10. THE HEIGHT OF FENCE WOULD BE SHOWN IN THE CORRESPONDING CIVIL DRAWING.
11. STATIC TENSION ON THE BUSES AND SHIELD WIRE SHALL BE SHOWN IN THE STRUCTURE LOADING DAIGRAM SEPARATELY.
12. LOCATION OF NEW TOWERS & MAIN BUS POST INSULATORS IN EXTENSION YARD SHALL BE MATCHED IN LINE WITH EXISTING TOWERS AND POST INSULATORS IN ADJACENT YARD.

MINIMUM CLEARANCE TABLE (IN AIR)

SNo	DESCRIPTION	UNIT	VALUE
1.	PHASE TO PHASE	mm	4200
2.	PHASE TO EARTH	mm	3400
3.	MINIMUM DISTANCE OF THE LOWEST EARTH PART OF INSULATOR SUPPORTING LIVE CONDUCTORS FROM GROUND LEVEL	mm	2550
4.	HEIGHT OF TUBE/COND. CENTER LINE OF FIRST LEVEL FROM GROUND LEVEL	mm	8300
5.	SECTION CLEARANCE	mm	6500
6.	HEIGHT OF MAIN BUS FROM GROUND LEVEL	mm	8300
7.	HEIGHT OF JACK BUS FROM PLINTH LEVEL	mm	22000
8.	HEIGHT OF SHIELD WIRE FROM PLINTH LEVEL	mm	29500
9.	PLINTH HEIGHT FROM GROUND LEVEL	mm	300
10.	SUB CONDUCTOR SPACING	mm	450

	PRESENT BHEL SCOPE
	EXISTING/FUTURE
	QUAD MOOSE ACSR CONDUCTOR
	AL. TUBE
	SHIELD WIRE
	FENCE
	EXISTING ROAD
	NEW ROAD
	DOUBLE TENSION STRING INSULATOR
	SUSPENSION STRING INSULATOR
	TOWER WITH PEAK
	CORONA END BELL
	EXISTING TOWER WITH PEAK
	PIE TYPE TOWER

SINGLE LINE DIAGRAM FOR 400 kV SAGARDIGHI SUBSTATION – DRG NO. TB-DG-445-316-E001 Rev01
TENDER SINGLE LINE DIAGRAM FOR 400 kV SAGARDIGHI SUBSTATION DRAWING NO. 12A05-DWG-E-0002
PLOT PLAN DRAWING NO. PE-DG-445-100-M001
EXTENTION OF 400kV SWITCHYARD LAYOUT PLAN DRAWING NO. 12A05-DWG-E-0405
PGCIL DRAWING Nos- 5427PK107-SDG-E-SYD-SYS-0401-SL Rev01 AND C/ENGG/ER/ERSS-XV/SAG/LAY/01 Rev00

REV.	DATE	ALTERED	NKT
		CHECKED	MVK
		APPROVED	SKS

06 30.11.21 — CHANGES/AMENDMENTS WERE MADE TO ACCOMODATE MEASURED INPUTS OF EXISTING TOWER CORDINATES IN PH-3 SWITCHYARD.

05 30.03.21 — CHANGES/AMENDMENTS WERE MADE BASED ON TRANSFORMER YARD LAYOUT FINALISATION.

04 08.03.21 — CHANGES/AMENDMENTS WERE MADE BASED ON DISCUSSION AND COMMENTS ON Rev-03

03 01.02.21 — CHANGES/AMENDMENTS WERE MADE BASED ON CHANGES IN TRANSFORMER YARD LAYOUT

02 05.12.20 — CHANGES/AMENDMENTS WERE MADE BASED ON CUSTOMER'S COMMENTS ON REV-01

01 20.10.20 — CHANGES/AMENDMENTS WERE MADE BASED ON CUSTOMER'S COMMENTS ON REV-00

ADDITIONAL INFORMATION
W.O.No.

STATUS OF DRAWING

DISTRIBUTION OF PRINTS

ग्राहक/परियोजना का नाम
NAME OF CUSTOMER/PROJECT
THE WEST BENGAL POWER DEVELOPMENT CORPN. LTD.
(1 x 660 MW) SAGARDIGHI THERMAL POWER EXTENTION PROJECT (UNIT 5)
LOA NO-WBPDCL/GM(M&C)/P210/SUPPLY/18-19/6060000006

NAME OF CONSULTANT
DEVELOPMENT CONSULTANTS PRIVATE LIMITED KOLKATA

भारत हेवी इलेक्ट्रिकल्स लिमिटेड
ट्रांसमिशन परियोजना विभाग
BHARAT HEAVY ELECTRICALS LTD.
TRANSMISSION PROJECTS DIVISION

	नाम /NAME	हस्ता. /SIGN.	दि./DATE
बनाया DRAWN	NKT		20.10.20
जाँचा CHECKED	MVK		
स्वीकृत APPROVED	SKS		

विभाग DEPT. कोड CODE
उपपत्र / SCALE 1:575
शर्त कोड CARD CODE

शीर्षक/TITLE
LAYOUT PLAN FOR 400kV SAGARDIGHI SUBSTATION

ड्रॉ.सं./DRAWING NO. TB-DG-445-316-E002
पुनः/REV. 06
पृष्ठ सं./SHEET No. 01 अगला पृष्ठ/NEXT SHEET --

DRAWING No. TB-DG-445-316-E002

The information on this document is the property of BHARAT HEAVY ELECTRICALS LIMITED and is loaned subject to return on request and on the understanding that it shall not be reproduced or disclosed to other than the company.
COPY RIGHT AND CONFIDENTIAL

COMPUTER DRG. PATH NAME :
REF. DRG. No.
SIGN. & DATE
INVENTORY No.

FIRST ANGLE PROJECTION

(ALL DIMENSIONS ARE IN mm)

DRG. NO. TB-DG-445-316-E003

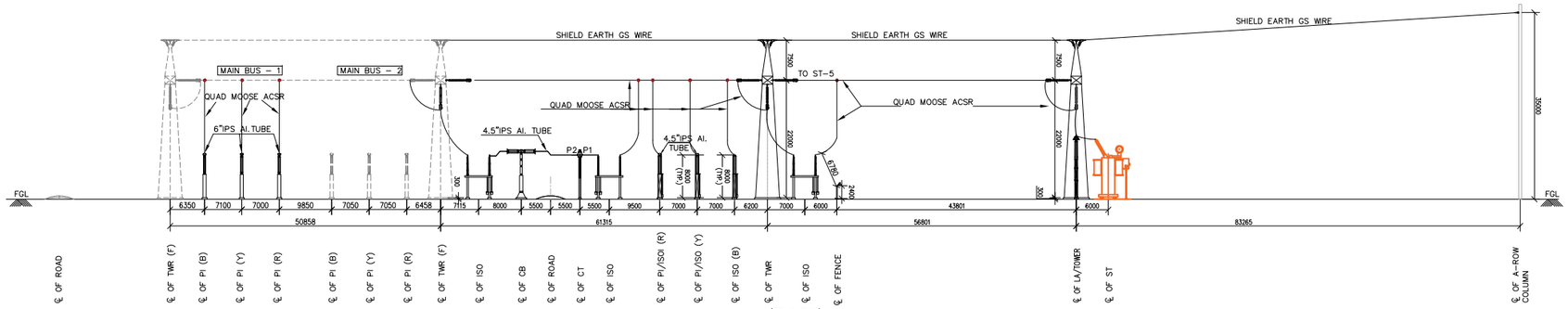

(ST-5 BAY)
SECTION A-A

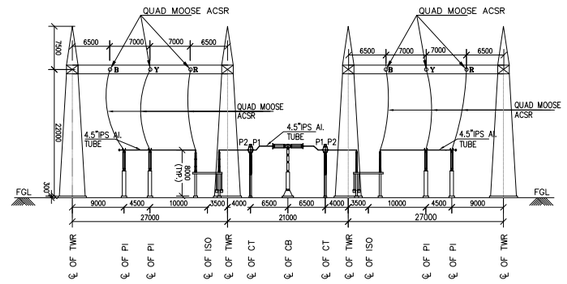

(TIE BAY)
SECTION E-E

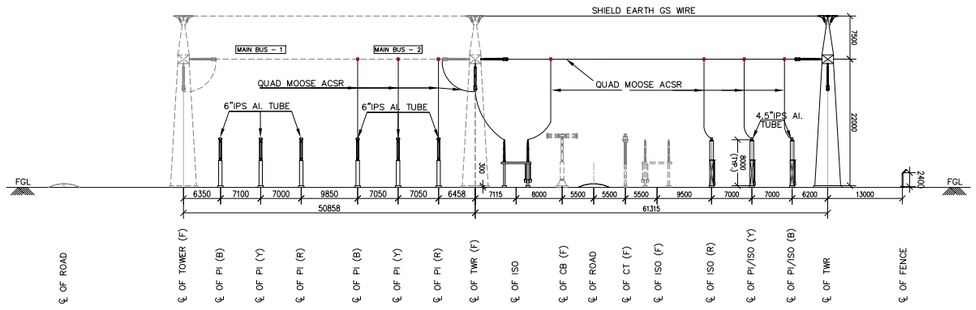

SECTION B-B
(GT-5 BAY)

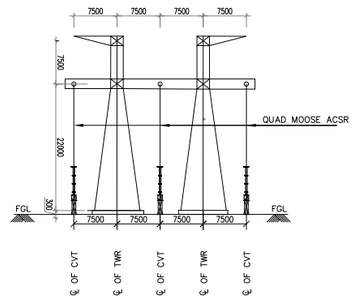

SECTION OF PIE TOWER

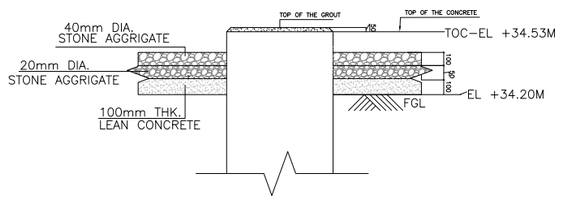

PLINTH ELEVATION LEVEL

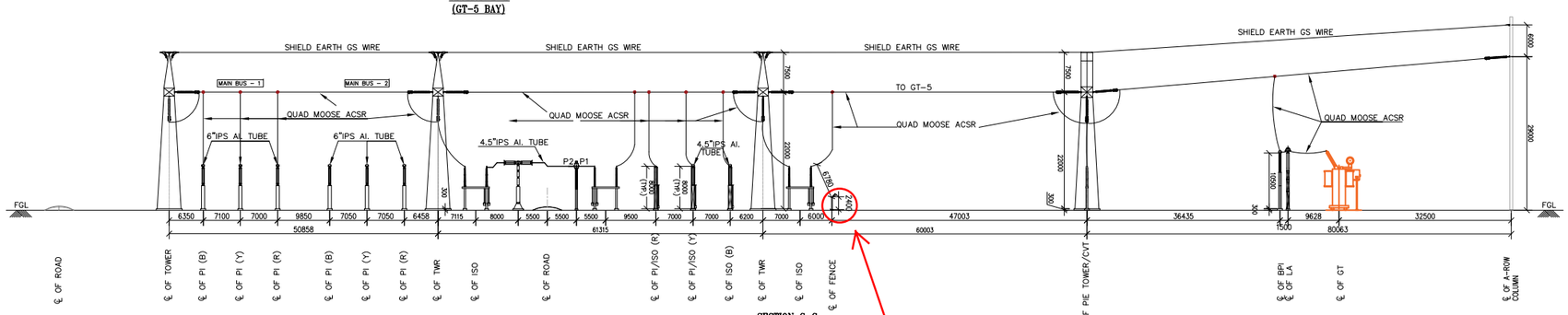

SECTION C-C
(GT-5 BAY)

Fence location shall be corrected as per comment given on Plan dwg. (typ.).

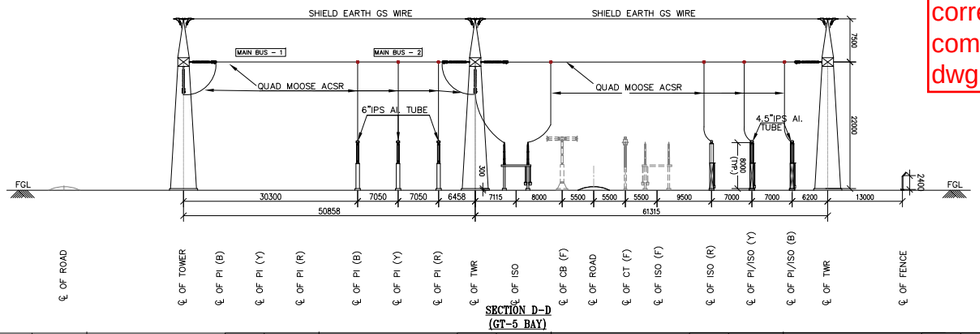

SECTION D-D
(GT-5 BAY)

———	PRESENT BHEL SCOPE
– – – –	EXISTING/FUTURE

ग्राहक/परियोजना का नाम
NAME OF CUSTOMER/PROJECT

THE WEST BENGAL POWER DEVELOPMENT CORPN. LTD.
(1 x 660 MW) SAGARDIGHI THERMAL POWER
EXTENTION PROJECT (UNIT 5)

LOA NO-WBPDCL/GM(M&C)/P210/SUPPLY/18-19/6060000006

NAME OF CONSULTANT

DEVELOPMENT CONSULTANTS PRIVATE LIMITED KOLKATA

भारत हेवी इलेक्ट्रिकल्स लिमिटेड
ट्रांसमिशन परियोजना विभाग
BHARAT HEAVY ELECTRICALS LTD.
TRANSMISSION PROJECTS DIVISION

	नाम /NAME	हस्ता./SIGN.	दि./DATE
बनाया DRAWN	NKT		03.10.20
जाँचा CHECKED	MVK		
स्वीकृत APPROVED	SKS		

REV.	DATE	ALT. / CHD. / APPD.	ZONE	CHANGES/AMENDMENT WERE MADE TO ACCOMODATE MEASURED INPUTS OF EXISTING TOWER CORDINATES IN PH-3 SWITCHYARD.
06	06.12.21	ALT. NKT / CHD. MVK / APPD. SKS		
05	30.03.21	ALT. NKT / CHD. MVK / APPD. SKS		AMENDMENTS WERE DONE BASED ON DISCUSSIONS AND COMMENTS ON REVISION-04
04	08.03.21	ALT. NKT / CHD. MVK / APPD. SKS		AMENDMENTS WERE DONE BASED ON DISCUSSIONS AND COMMENTS ON REVISION-03
03	01.02.21	ALT. NKT / CHD. MVK / APPD. SKS		AMENDMENTS WERE DONE BASED ON CHANGE IN TRANSFORMER YARD LAYOUT.
02	05.12.20	ALT. NKT / CHD. MVK / APPD. SKS		AMENDMENTS WERE DONE BASED ON CUSTOMER'S OBSERVATION ON REV01.
01	27.10.20	ALT. NKT / CHD. MVK / APPD. SKS		AMENDMENTS WERE DONE BASED ON CUSTOMER'S OBSERVATION ON REV00.

विभाग DEPT. / कोड CODE

अनुपात / SCALE 1:575

कार्ड कोड CARD CODE

शीर्षक/TITLE
SECTION ELEVATION FOR 400kV SAGARDIGHI SUBSTATION

ड्राईंग.क./DRAWING NO. TB-DG-445-316-E003

पुनः/REV. 06

पृष्ठ क./SHEET No. 01 अगला पृष्ठ/NEXT SHEET --

THE INFORMATION ON THIS DOCUMENT IS THE PROPERTY OF BHARAT HEAVY ELECTRICALS LIMITED. IT MUST NOT BE USED DIRECTLY OR INDIRECTLY IN ANY WAY DETRIMENTAL TO THE INTEREST OF THE COMPANY

COMPUTER FILE NAME

REF. DRG. NO.

SIGN. AND DATE

INVENTORY NO

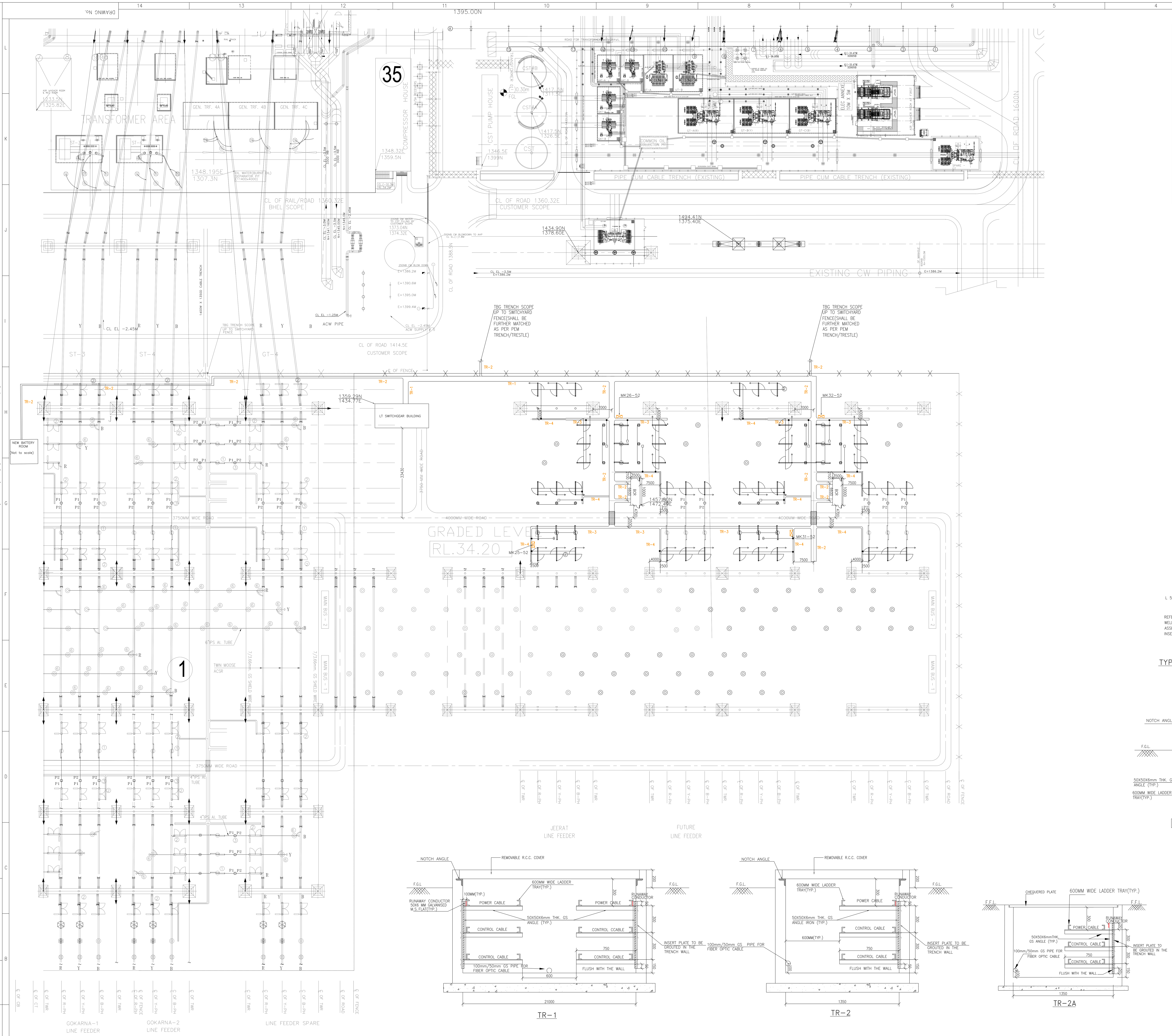

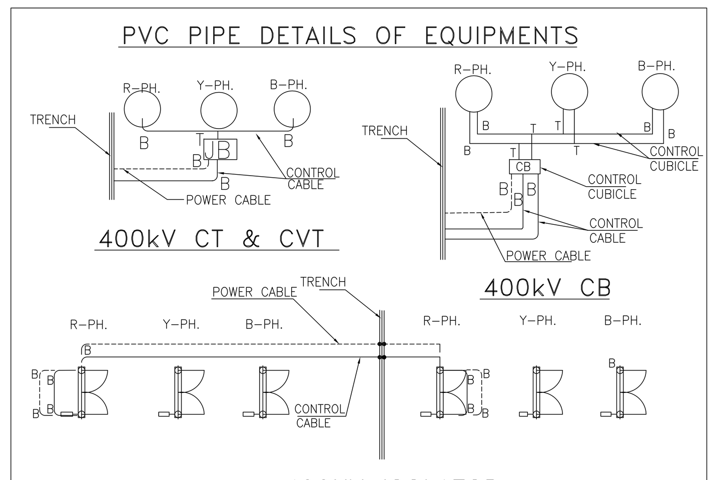

LEGEND

1.---------- 50MM PVC PIPE (CLASS-4)
2.———— 110MM PVC PIPE (CLASS-4)
3. B INDICATE NORMAL BEND
4. T INDICATE TEE BEND

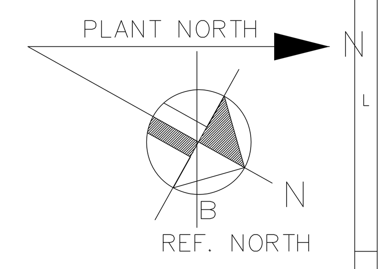

NOTES:-

1. ALL DIMENSIONS ARE IN mm.
2. THE LOCATION OF CABLE TRENCHES MARKED IN THIS DWG MAY BE SLIGHTLY MODIFIED TO SUIT SITE CONDITIONS.
3. OPENINGS FOR TAKING OUT PVC PIPES TO EQUIPMENTS SHALL BE PROVIDED IN CABLE TRENCHES. OPENING OF SIZE SUITABLE TO DIA. 50/110 PIPE SHALL BE PROVIDED BELOW TOP CABLE SUPPORT.
4. MK = INDICATES MARSHALLING KIOSK.
5. MK SHALL BE PLACED IN THE LOCATION SHOWN. EXACT COORDINATES TO BE SUITABLY DECIDED AT SITE.
6. ALL CABLE TRAYS & ACCESSORIES AND CABLE TRAY SUPPORT SYSTEM SHALL BE HOT DIP GALVANISED MS. TRAY SUPPORTED ON RACKS (HOT DIP GALVANISED MS ANGLE).
7. CABLE SUPPORT SHALL BE PROVIDED AT EVERY 1250mm INTERVAL.
8. INSERTS MUST BE EMBEDDED AT EVERY 1250mm INTERVAL FOR FIXING CABLE SUPPORT.
9. AUXILIARY POWER CABLES SHALL BE LAID IN TOP TIERS AND CONTROL CABLES IN BOTTOM TIERS,
10. FIBER OPTIC CABLE BETWEEN BAY CONTROL ROOM(BCR) AND EXISTING CONTROL ROOM SHALL BE LAID IN CONDUITS MADE OF HOT DIP GALVANIZED STEEL WITH ORGANIC CORROSION RESISTANT ID COATING AND AND SAME SHALL BE ROUTED THROUGH BOTTOM OF CABLE TRENCH.CONDUIT USED FOR FIBER OPTICS CABLES SHALL BE SUITABLY CLAMPED TO AVOID MOVEMENT. SEPARATE CONDUIT WILL BE CONSIDERED FOR EACH FIBRE OPTIC CABLE.
11. CABLES FOR LIGHTING PURPOSE SHALL BE LAID IN PVC PIPE/ TRENCH. SEPARATE DRAWING SHALL BE SUBMITTED FOR LIGHTING SYSTEM.
12. LOCATION OF CABLE TRENCHES INSIDE LT SWITCHGEAR ROOM,BCR AND BATTERY ROOM SHALL BE SHOWN IN SEPARATE DRAWINGS.
13. A CONTINUOUS 50X6 MM GALVANISED M.S. FLAT GROUND CONDUCTOR (RUNWAY CONDUCTOR) SHALL BE INSTALLED ALONG ALL CABLE RACKS WHICH SHALL SERVE AS THE MAIN GROUNDING CONDUCTOR FOR RECEIVING INDIVIDUAL GROUND CONNECTION. ALL TRAY TIERS IN EACH SECTION SHALL BE CONNECTED TO THE RUNWAY CONDUCTOR AT AN INTERVAL OF 10M. THE RUNWAY CONDUCTOR SHALL BE CONNECTED TO UNDERGROUND GROUNDING SYSTEM AT AN INTERVAL OF 30M.
14. CABLES CROSSING ROAD SHALL BE LAID IN PIPE CULVERT (FOR QUANTITY OF PIPE REFER TABLE-1)
15. FOR POWER & CONTROL CABLES, SEPARATE PIPES SHALL BE USED CONSIDERING 60% VOID FOR EACH PIPE I.E., 40% FILLING CRITERIA.
16. ————● INDICATES CABLES LAID IN PVC PIPES OF 50/110mm OUTER DIA AT DEPTH OF 300mm (MAX.) CABLE FROM EQUIPMENT TO CABLE TRENCH SHALL RUN IN PVC PIPES.
17. MARKED THUS (.) INDICATES CABLE ENTRY/EXIT FROM EQUIPMENT.
18. ALL OTHER DETAILS PERTAINING TO CIVIL WORKS SHALL BE REFLECTED IN THE RESPECTIVE CIVIL DRAWINGS
19. PVC PIPES SHALL BE SECURELY FIXED AT BOTH ENDS.
20. AFTER LAYING THE CABLES THE ENDS OF PVC PIPES SHALL BE FULLY SEALED TO PREVENT INGRESS OF WATER INSIDE THE PIPE.
21. CONTROL CABLES & POWER CABLES MUST BE LAID IN SEPARATE PVC PIPES.
22. THE PURPOSE OF TRENCH LAYOUT DRAWING IS FOR USE AS FOLLOWS:
    - TO BE USED AS CIVIL INPUT FOR CABLE TRENCHES.
    - FOR ERECTION OF CABLE RACKS AT SITE.
    - FOR CABLE LAYING AND ROUTING AT SITE.
23. CONTROL CABLE CAN BE LAID UP TO A MAXIMUM TWO LAYERS IN EACH TRAY.
24. LONGITUDINAL SLOPE IN CABLE TRENCH SHALL BE TYPICALLY 1:500
25. THE CABLE OF CT /CVT BETWEEN SECONDARY TERMINAL BOX AND JUNCTION BOX SHALL BE LAID IN 110MM PVC PIPE.
26. [hatched box] INDICATE PIPE CULVERT .
27. CABLE TRAYS SHALL BE WELDED WITH HORIZONTAL CABLE SUPPORT RACK ANGLE.
28. THE CABLE RACK ASSEMBLY SHALL BE WELDED TO EMBEDED INSERT PLATE AS MENTIONED BELOW. "6mm WELD 50mm LONG ON BOTH SIDES OF VERTICAL ANGLE AT TOP AND BOTTOM AND NEAR EVERY INTERMEDIATE HORIZONTAL CABLE SUPPORT ANGLE, IT MEANT THAT IF CABLE RACK ASSEMBLY HAS THREE TIERS THEN IT SHALL BE WELDED TO FIVE LOCATION AT BOTH SIDE".
29. CABLES SHALL BE ROUTED THROUGH SHORTEST ROUTE AS POSSIBLE.
30. POWER CABLE SHALL BE LAID IN SINGLE LAYER IN TRAYS.
31. SUMP AND DRAINAGE SHALL BE SHOWN IN SEPARATE CIVIL DRAWING.
32. THE PORTION OF GALVANISED STEEL, WHICH IF REQUIRED UNDERGOES ANY WELDING AT SITE SHALL BE COATED WITH TWO COATS OF COLD GALVANISING ANTI-CORROSIVE PAINT AFTER WELDING.
33. RUNAWAY CONDUCTOR IS 50X6 MM GALVANISED MS FLAT
34. SEPERATE DRAWING WILL INCLUDE DETAILS OF PIPE CULVERT FOR ROAD CROSSING.
35. DRAIN CROSSING OF TRENCH SHALL BE SHOWN IN SEPARATE CIVIL DRAWING.
36. ENTRY POINT IN EXISTING CONTROL ROOM FROM TRESTLE SHALL BE DECIDED AT SITE.

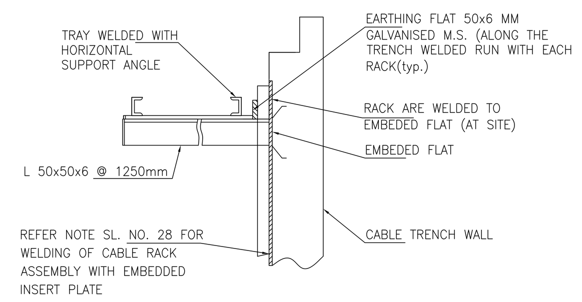

TYPICAL CABLE RACK FIXING DETAIL

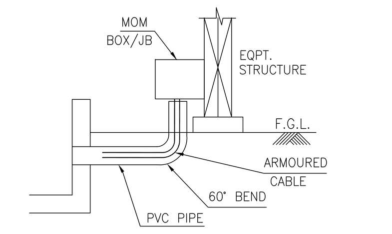

DETAIL SHOWING ROUTING OF CABLE INSIDE PVC PIPE CABLE TRENCH TO EQUIPMENT

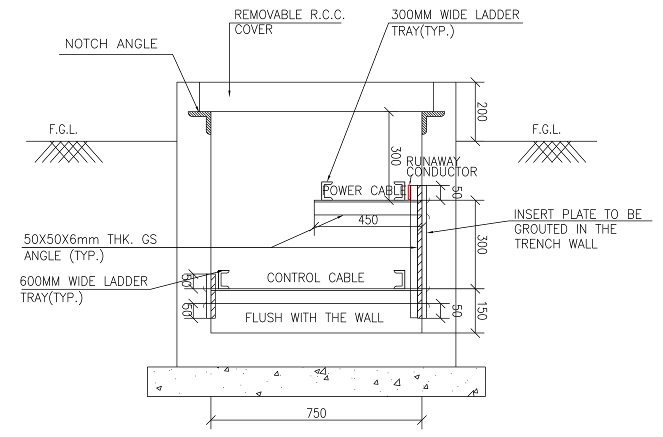

TR-3

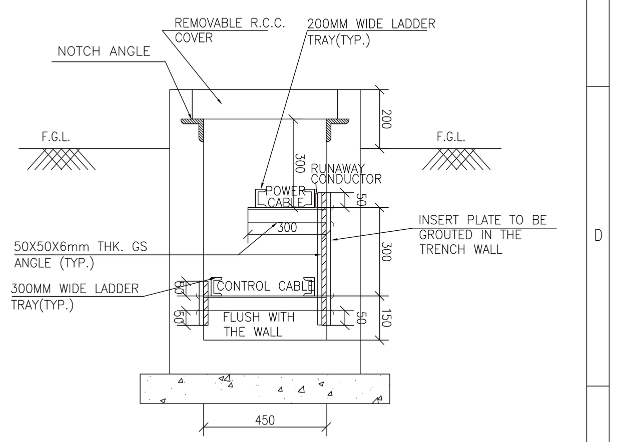

TR-4

REFRENCE DRAWING

400kV SWITCHYARD ELECTRICAL LAYOUT DRAWING NO. TB-DG-445-316-E002
TRANSFORMER YARD LAYOUT PE-DG-445-100-E001 REV 03

REV.	DATE	ALTERED	CHECKED	APPROVED	DESCRIPTION
02	11.11.21	NKT	MVK	SKS	Document is revised based on WBPDCL/DCPL comments on Rev-03
01	14.07.21	NKT	MVK	SKS	Document is revised based on WBPDCL/DCPL comments on Rev-01
01	25.04.21	NKT	MVK	SKS	Document is revised based on WBPDCL/DCPL comments on Rev-00

DRG NO. | TITLE

ADDITIONAL INFORMATION
W.O.No.

STATUS OF DRAWING

DISTRIBUTION OF PRINTS

ग्राहक/परियोजना का नाम
NAME OF CUSTOMER/PROJECT **THE WEST BENGAL POWER DEVELOPMENT CORPN. LTD.**
(1 x 660 MW) SAGARDIGHI THERMAL POWER EXTENTION PROJECT (UNIT 5)
LOA NO-WBPDCL/GM(M&C)/P210/SUPPLY/18-19/6060000006

NAME OF CONSULTANT
DEVELOPMENT CONSULTANTS PRIVATE LIMITED KOLKATA

भारत हेवी इलेक्ट्रिकल्स लिमिटेड
ट्रांसमिशन परियोजना विभाग
BHARAT HEAVY ELECTRICALS LTD.
TRANSMISSION PROJECTS DIVISION

	नाम /NAME	हस्ता./SIGN.	दि./DATE
बनाया DRAWN	NKT		11.02.21
जॅचा CHECKED	MVK		11.02.21
स्वीकृत APPROVED	SKS		11.02.21

विभाग DEPT. | कोड CODE | अनुपात / SCALE 1:575 | कार्ड कोड CARD CODE

शीर्षक/TITLE
TRENCH LAYOUT OUTDOOR FOR 400kV SAGARDIGHI S/s

ड्राईग.क्र./DRAWING NO. **TB-DG-445-316-E005** | पुनः/REV. **03**

पृष्ठ क्र./SHEET No.**01** | अगला पृष्ठ/NEXT SHEET--

BHARAT HEAVY ELECTRICALS LIMITED

TRANSMISSION BUSINESS ENGINEERING MANAGEMENT

DOCUMENT No.	TB-DG-445-316-E008	Rev no.-03	Prepared	Checked	Approved
TYPE OF DOC.	DESIGN DOCUMENT	NAME	NKT	MVK	SKS
TITLE		SIGN	-do-	-do-	-do-
Panel placement & Trench layout in LT switchgear room		DATE	15.05.21	15.05.21	15.05.21
		GROUP	TBEM	W.O. No	
CUSTOMER/ CONSULTANT	The West Bengal Power Development Corporation Ltd. / Development Consultants Private Ltd. Kolkata				
PROJECT	1X660MW thermal power extension project Unit-5 at Sagardighi- 400KV Switchyard				

COPYRIGHT & CONFIDENTIAL
The Information in this document is the property of BHARAT HEAVY ELECTRICALS LIMITED
This must not be used directly or indirectly in any way detrimental to the interest of the Company

CONTENTS

S No	Description	Pages
1.	**Panel placement & trench layout in LT switchgear room**	03

Rev No.	Date	Altered	Checked	Approved	REVISION DETAILS
03	31.10.21	NKT	MVK	SKS	Based on comments received on drawing Rev02
02	05.10.21	NKT	MVK	SKS	Based on comments received on drawing Rev01
01	13.07.21	NKT	MVK	SKS	Based on comments received on drawing Rev00

Distribution	To Copies	TBTS	O/C	TBMM	TBQM	TBCM
		-	1	-	-	-

FIRST ANGLE PROJECTION (ALL DIMENSIONS ARE IN MM.)

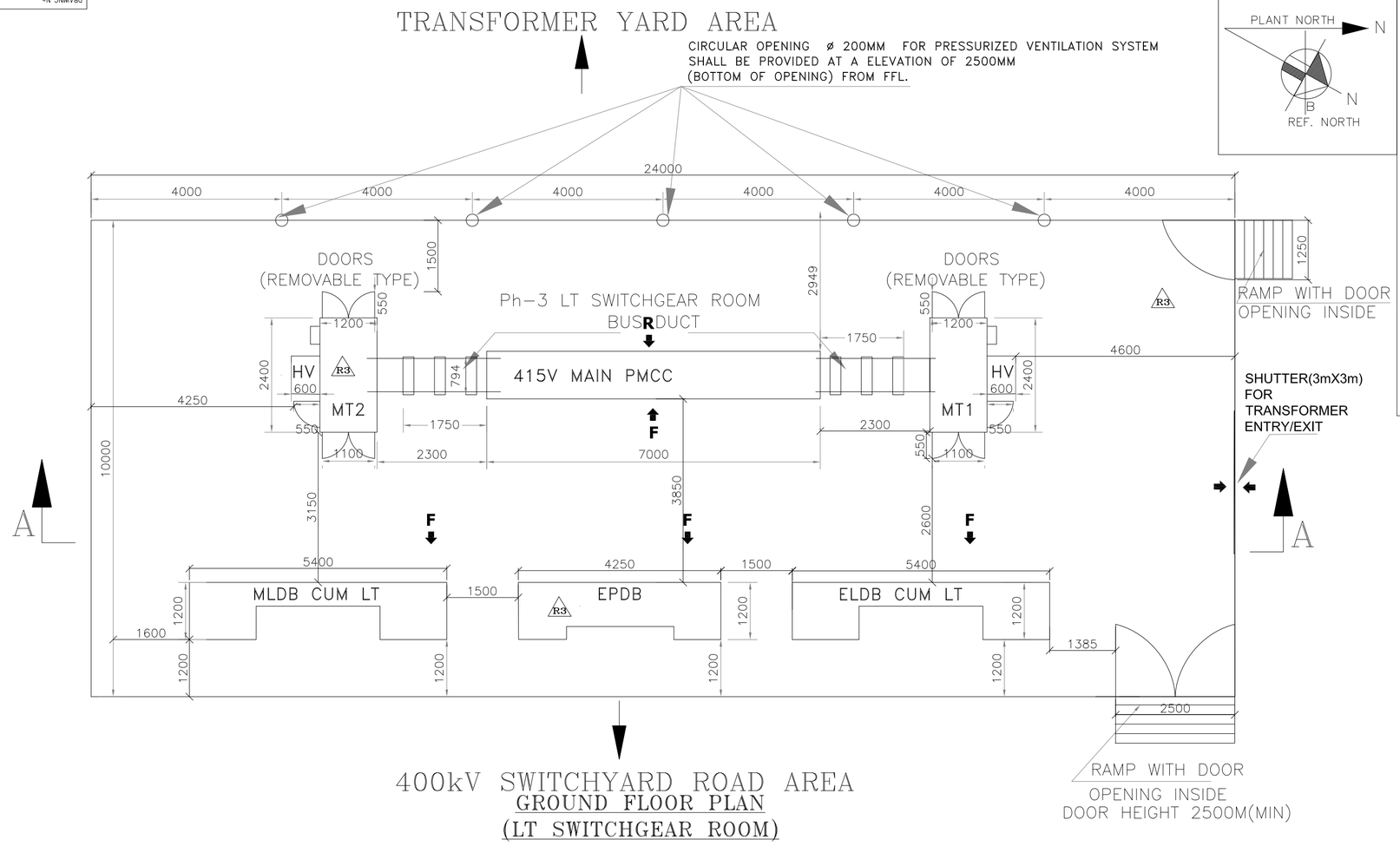

GROUND FLOOR PLAN
(LT SWITCHGEAR ROOM)

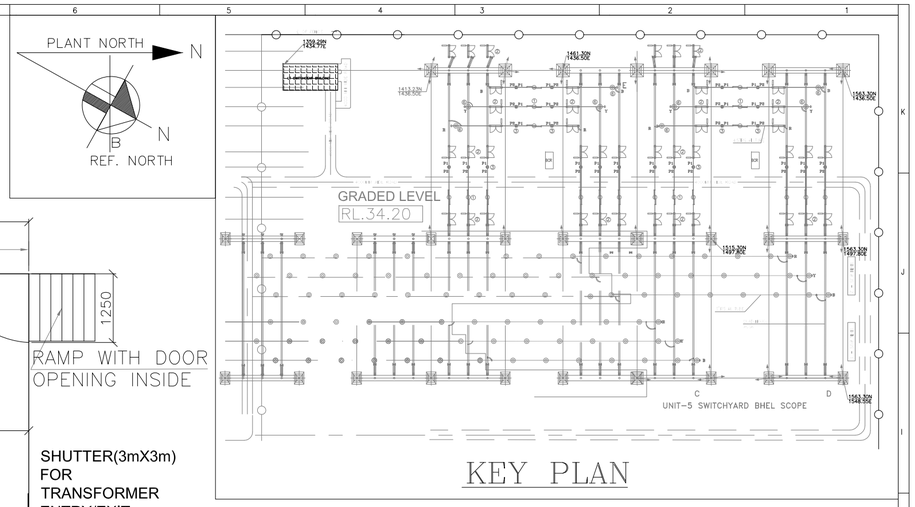

KEY PLAN

NOTES:-

1. ALL DIMENSION ARE TENTATIVE AND IN mm.
2. THE DIMENSION AND ARRANGEMENT OF PANELS INSIDE LT SWITCHGEAR ROOM ARE INDICATIVE AND SHALL BE FINALISED DURING DETAILED ENGINEERING.
3. LT SWITCHGEAR ROOM SHALL BE PROVIDED WITH PRESSURIZED VENTILATION SYSTEM BY MEANS OF WALL MOUNTED FAN FILTER UNITS AND EXHAUST THROUGH BACK DRAFT DAMPERS.
4. ALL THE DIMENSIONS OF THE ROOM ARE INNER DIMENSIONS.
5. SEPARATE DRAWING SHALL BE SUBMITED FOR DETAILED ARCHITECTURE LAYOUT OF LT SWITCHGEAR ROOM.
6. PROTECTION/BAY CONTROL PANELS WILL BE LOCATED IN OUTDOOR SWITCHYARD BAY CONTROL ROOM.
7. NON SEGREGATED PHASE BUS DUCT BETWEEN DRY TYPE TRANSFORMER & 415V MAIN PMCC BOARD SHALL BE SUITABLE FOR TOP ENTRIES. THE DETAILED OF BUS DUCT CONNECTION SHALL BE SHOWN IN SEPARATE DRAWING.
8. MAXIMUM HEIGHT OF 1800MM FOR MLDB,ELDB AND EPBD IS TAKEN FROM VENDOR'S DRAWING.

LEGEND-

PMCC	=	POWER CUM MOTOR CONTROL CENTER
EPDB	=	EMERGENCY POWER DISTRIBUTION BOARD
MT	=	DRY TRANSFORMER
MLDB CUM LT	=	MAIN LIGHTING DISTRIBUTION BOARD CUM LIGHTING TRANSFORMER
ELDB CUM LT	=	EMERGENCY LIGHTING DISTRIBUTION BOARD CUM LIGHTING TRANSFORMER
FFL	=	FINISHED FLOOR LEVEL
FGL	=	FINISHED GROUND LEVEL
F	=	FRONT
	=	BUS DUCT
	=	RCC SLAB

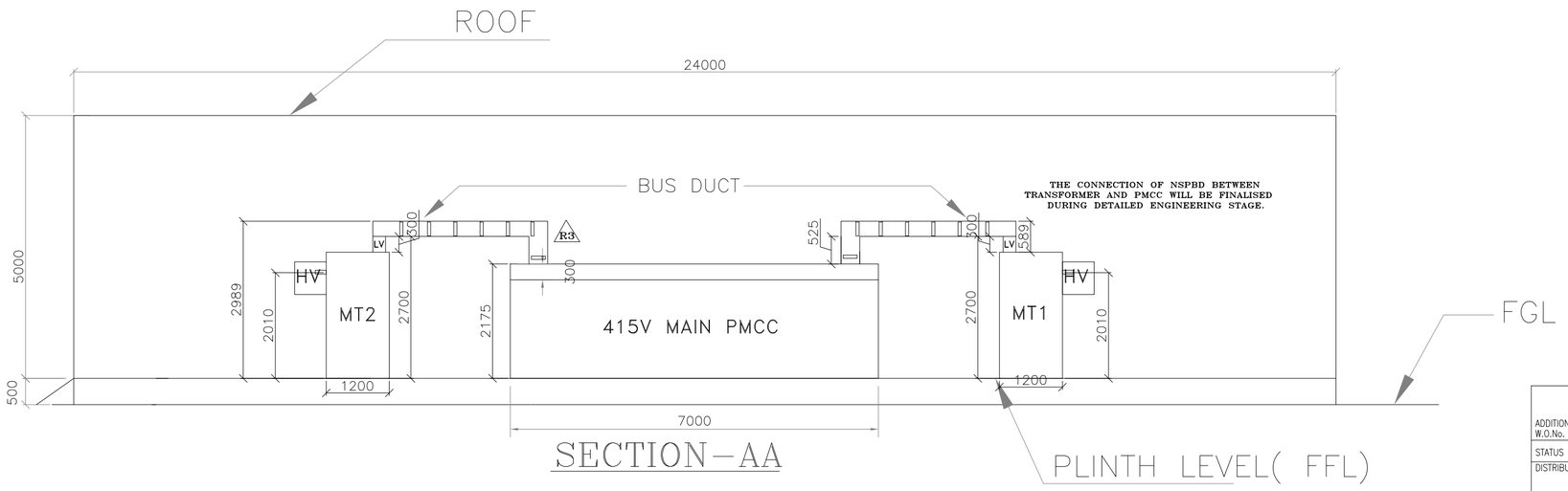

SECTION-AA

REFERENCE DWG. :-

LAYOUT PLAN 400kV SAGARDIGHI SUBSTATION
DWG. NO. TB-DG-445-316-E002

ADDITIONAL INFORMATION W.O.No.
STATUS OF DRAWING
DISTRIBUTION OF PRINTS

গ্রাহক/পরিযোজনা का नाम NAME OF CUSTOMER/PROJECT: THE WEST BENGAL POWER DEVELOPMENT CORPN. LTD.
(1X660 MW) SAGARDIGHI THERMAL POWER EXTENTION PROJECT (UNIT 5)

NAME OF CONSULTANT: DEVELOPMENT CONSULTANTS PRIVATE LIMITED KOLKATA

भारत हेवी इलेक्ट्रिकल्स लिमिटेड ट्रांसमिशन परियोजना विभाग
BHARAT HEAVY ELECTRICALS LTD. TRANSMISSION PROJECTS DIVISION

	नाम /NAME	हस्ता./SIGN.	दि./DATE
बनाया DRAWN	NKT		15.04.21
जाँचा CHECKED	MVK		
स्वीकृत APPROVED	SKS		

विभाग DEPT. | कोड CODE | अनुपात / SCALE 1:110 | कार्ड कोड CARD CODE

शीर्षक/TITLE: PANEL PLACEMENT AND TRENCH LAYOUT IN LT SWITCHGEAR ROOM

ड्राईंग क./DRAWING NO. TB-DG-445-316-E008 | पुनः/REV. 03

पृष्ठ क./SHEET No. 01 | अगला पृष्ठ /NEXT SHEET 02

REV.	DATE	ALTERED / CHECKED / APPROVED	ZONE	Remarks
03	31.10.21	NKT / MVK / SKS		Drawing amended based on customers comment on Rev02
02	30.09.21	NKT / MVK / SKS		Drawing amended based on customers comment on Rev01
01	13.07.21	NKT / MVK / SKS		Drawing amended based on customers comment on Rev00

COPY RIGHT AND CONFIDENTIAL
The information on this document is the property of BHARAT HEAVY ELECTRICALS LIMITED
It must not be used directly or indirectly in anyway detrimental to the interest of the company.

COMPUTER DOC. PATH NAME :
REF. DRG. No.
SIGN. & DATE
INVENTORY No.
DRAWING No.

FIRST ANGLE PROJECTION (ALL DIMENSIONS ARE IN MM.)

DRAWING No. TB-DG-445-316-E008

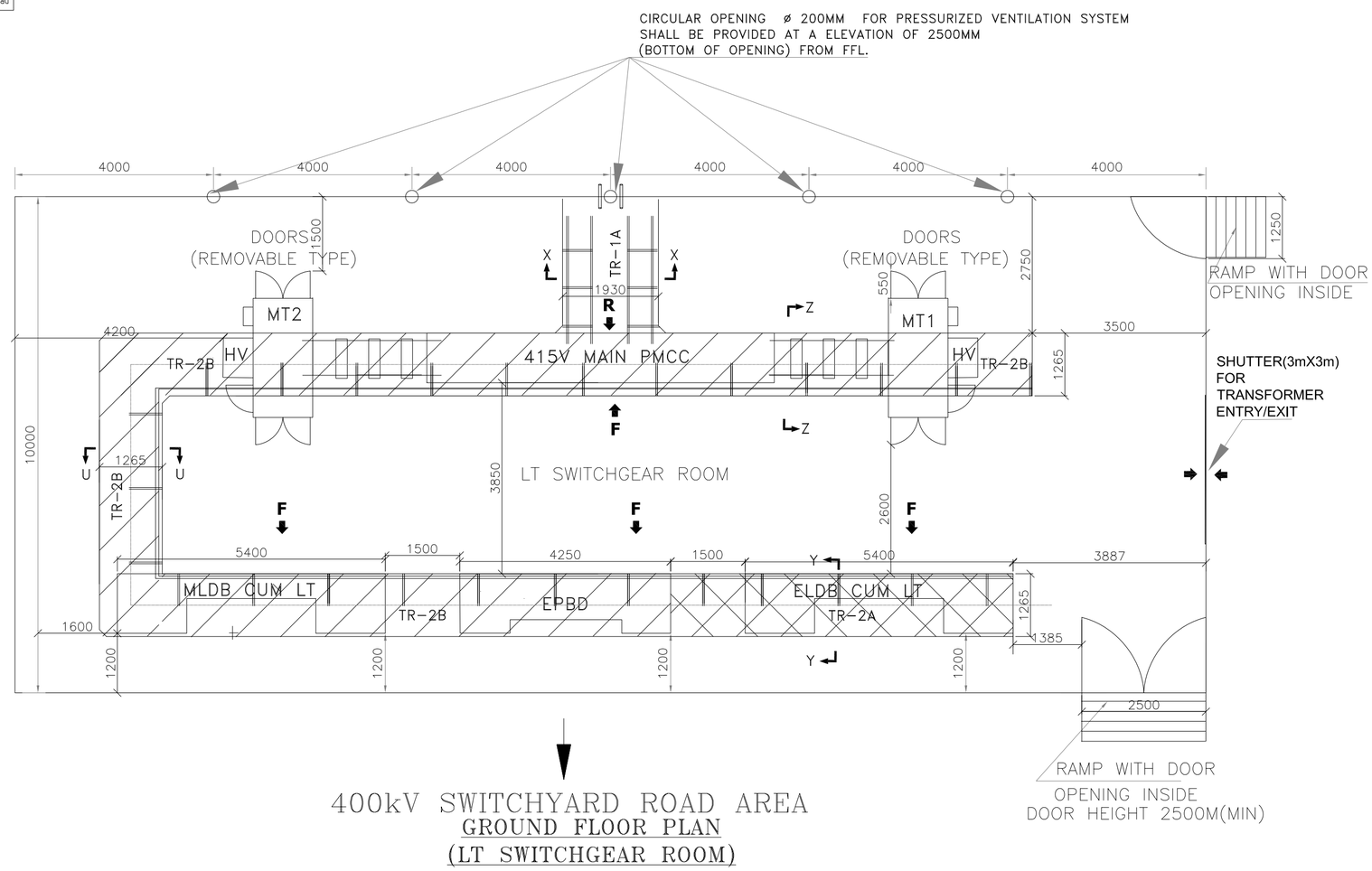

GROUND FLOOR PLAN (LT SWITCHGEAR ROOM)

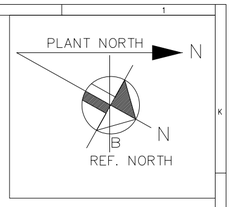

NOTE:-

1. ALL DIMENSIONS ARE FROM THE INSIDE FACE OF THE WALLS .
2. CABLE RACKS/INSERTS PLATE SHALL BE FIXED AT EVERY 1250 MM INTERVAL IN TRENCHES INSIDE LT SWITCHGEAR ROOM. INSERTS PLATE SHALL BE PROVIDED TOWARDS FRONT OF PANEL SIDE.
3. THIS DRAWING IS TO BE REFERRED FOR TRENCH LAYOUT & PANEL PLACEMENT DETAILS ALSO.
4. AUXILIARY POWER CABLES SHALL BE LAID IN TOP TIERS AND CONTROL CABLES IN BOTTOM TIERS (AS SHOWN IN TRENCH SECTION DRAWING).
5. ALL OTHER DETAILS PERTAINING TO CIVIL WORKS SHALL BE REFLECTED IN THE RESPECTIVE CIVIL DRAWINGS .
6. CHEQUERED PLATE TO BE PROVIDED FOR THE TRENCHES INSIDE THE LT SWITCHGEAR ROOM.
7. PANELS COMING ON TRENCHES SHALL BE SUPPORTED ON CHANNELS FIXED OVER TRENCH FLUSHED WITH FFL. 50MM FRONT SIDE OF PANEL SHALL BE SUPPORTED ON FINISHED FLOOR LEVEL.
8. REFER TABLE-1 FOR QUANTITIES OF RCC FOR TRENCH ENTRY IN LT SWITCHGEAR ROOM.
9. SEPEARTE DRAWING WILL BE RELEASED FOR DETAIL OF BUS DUCT ARRANGEMENT BETWEEN DRY TYPE TRANSFORMER & 415V MAIN PMCC BOARD.
10. DETAILED ARRANGEMENT OF RCC PIPE ENTRY IN LT SWITCHGEAR ROOM SHALL BE SHOWN IN CIVIL DRAWING.
11. 1.1kV CABLE SHALL BE PLACED ON 2.5M LONG GS TRAY SUPPORTED ON RACK (GS ANGLE).
12. FIBER OPTIC CABLE INSIDE LT SWITCHGEAR ROOM SHALL BE LAID IN 100mm DIA GS PIPE AND SAME SHALL BE ROUTED THROUGH BOTTOM OF CABLE TRENCH. 100mm DAI GS PIPE USED FOR FIBER OPITCS CABLES SHALL BE SUITABLY CLAMPED TO AVOID MOVEMENT.
13. CONTROL CABLE CAN BE LAID UP TO A MAXIMUM TWO LAYERS IN TRAY.
14. LONGITUDINAL SLOPE IN CABLE TRENCH SHALL BE TYPICALLY 1:500
15. CABLE TRAYS SHALL BE TACK WELDED WITH HORIZONTAL CABLE SUPPORT RACK ANGLE.
16. POWER CABLE SHALL BE LAID IN SINGLE LAYER IN TRAYS.
17. THE PORTION OF GALVANISED STEEL, WHICH IF REQUIRED UNDERGOES ANY WELDING AT SITE SHALL BE COATED WITH TWO COATS OF COLD GALVANISING ANTI-CORROSIVE PAINT AFTER WELDING.
18. 220V DCDB-MAIN AND STANDBY, DUAL FCBC-1 & 2,AND 2X100% BATTERY SHALL BE LOCATED IN SEPERATE BATTERY ROOM.
19. FOUNDATION DETAILED OF DRY TYPE TRANSFORMER SHALL BE SHOWN IN CIVIL DRAWING.

TABLE-1

TANTATIVE QTY OF RCC PIPE FOR ENTRY IN LT SWITCHGEAR ROOM	
TRENCH TYPE	300MM OD
	12 NOS.

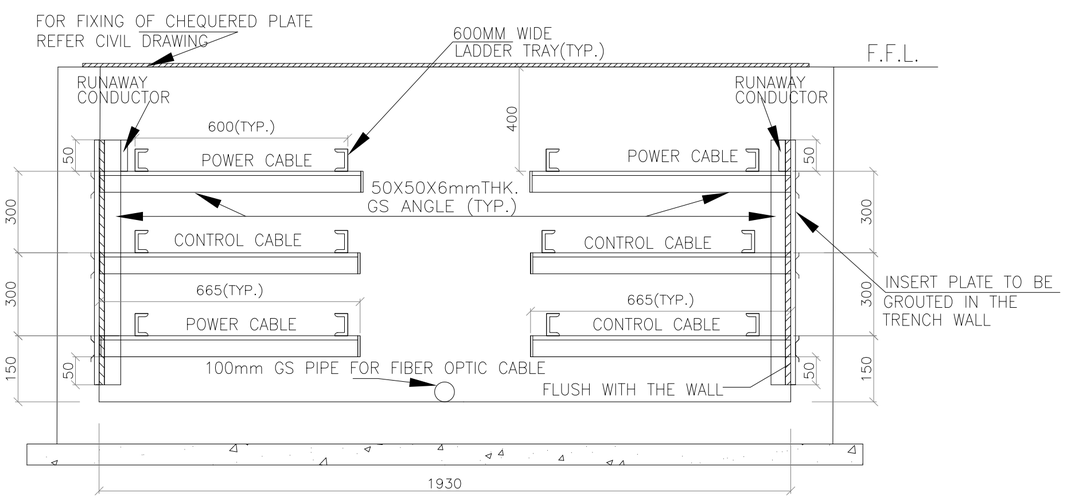

SECTION X-X OF TR-1A

LEGEND-

PMCC	=	POWER CUM MOTOR CONTROL CENTER
EPDB	=	EMERGENCY POWER DISTRIBUTION BOARD
MT	=	DRY TRANSFORMER
MLDB CUM LT	=	MAIN LIGHTING DISTRIBUTION BOARD CUM LIGHTING TRANSFORMER
ELDB CUM LT	=	EMERGENCY LIGHTING DISTRIBUTION BOARD CUM LIGHTING TRANSFORMER
FFL	=	FINISHED FLOOR LEVEL
FGL	=	FINISHED GROUND LEVEL
F	=	FRONT
	=	BUS DUCT
	=	RCC SLAB

REV.	DATE	ALTERED / CHECKED / APPROVED	ZONE
03	31.10.21	NKT / MVK / SKS	Drawing amended based on customers comment on Rev02
02	30.09.21	NKT / MVK / SKS	Drawing amended based on customers comment on Rev01
01	13.07.21	NKT / MVK / SKS	Drawing amended based on customers comment on Rev00

ADDITIONAL INFORMATION W.O.No.

STATUS OF DRAWING

DISTRIBUTION OF PRINTS

ग्राहक/परियोजना का नाम THE WEST BENGAL POWER DEVELOPMENT CORPN. LTD.

NAME OF CUSTOMER/PROJECT

(1X660 MW) SAGARDIGHI THERMAL POWER EXTENTION PROJECT (UNIT 5)

NAME OF CONSULTANT

DEVELOPMENT CONSULTANTS PRIVATE LIMITED KOLKATA

भारत हेवी इलेक्ट्रिकल्स लिमिटेड ट्रांसमिशन परियोजना विभाग
BHARAT HEAVY ELECTRICALS LTD. TRANSMISSION PROJECTS DIVISION

	नाम /NAME	हस्ता./SIGN.	दि./DATE
बनाया DRAWN	NKT		15.04.21
जाँचा CHECKED	MVK		
स्वीकृत APPROVED	SKS		

विभाग DEPT. | कोड CODE | अनुपात / SCALE 1:110 | कार्ड कोड CARD CODE

शीर्षक/TITLE PANEL PLACEMENT AND TRENCH LAYOUT IN LT SWITCHGEAR ROOM

डॉ.क्र./DRAWING NO. TB-DG-445-316-E008

पृष्ठ/REV. 03

पृष्ठ क्र./SHEET No. 02 अगला पृष्ठ/NEXT SHEET 03

COPYRIGHT AND CONFIDENTIAL
The information on this document is the property of BHARAT HEAVY ELECTRICALS LIMITED
It must not be used directly or indirectly in anyway detrimental to the interest of the company.

COMPUTER DRG. PATH NAME :

REF. DRG. No.

SIGN. & DATE

INVENTORY No.

FIRST ANGLE PROJECTION (ALL DIMENSIONS ARE IN MM.)

DRAWING No. TB-DG-373-316-E009

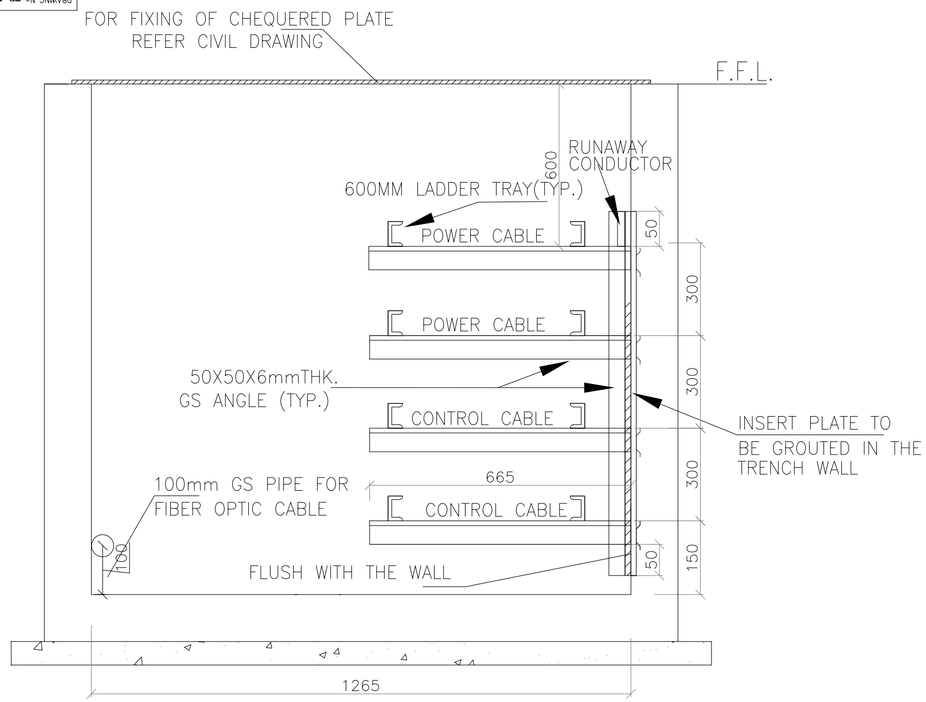

SECTION U–U OF TR–2B

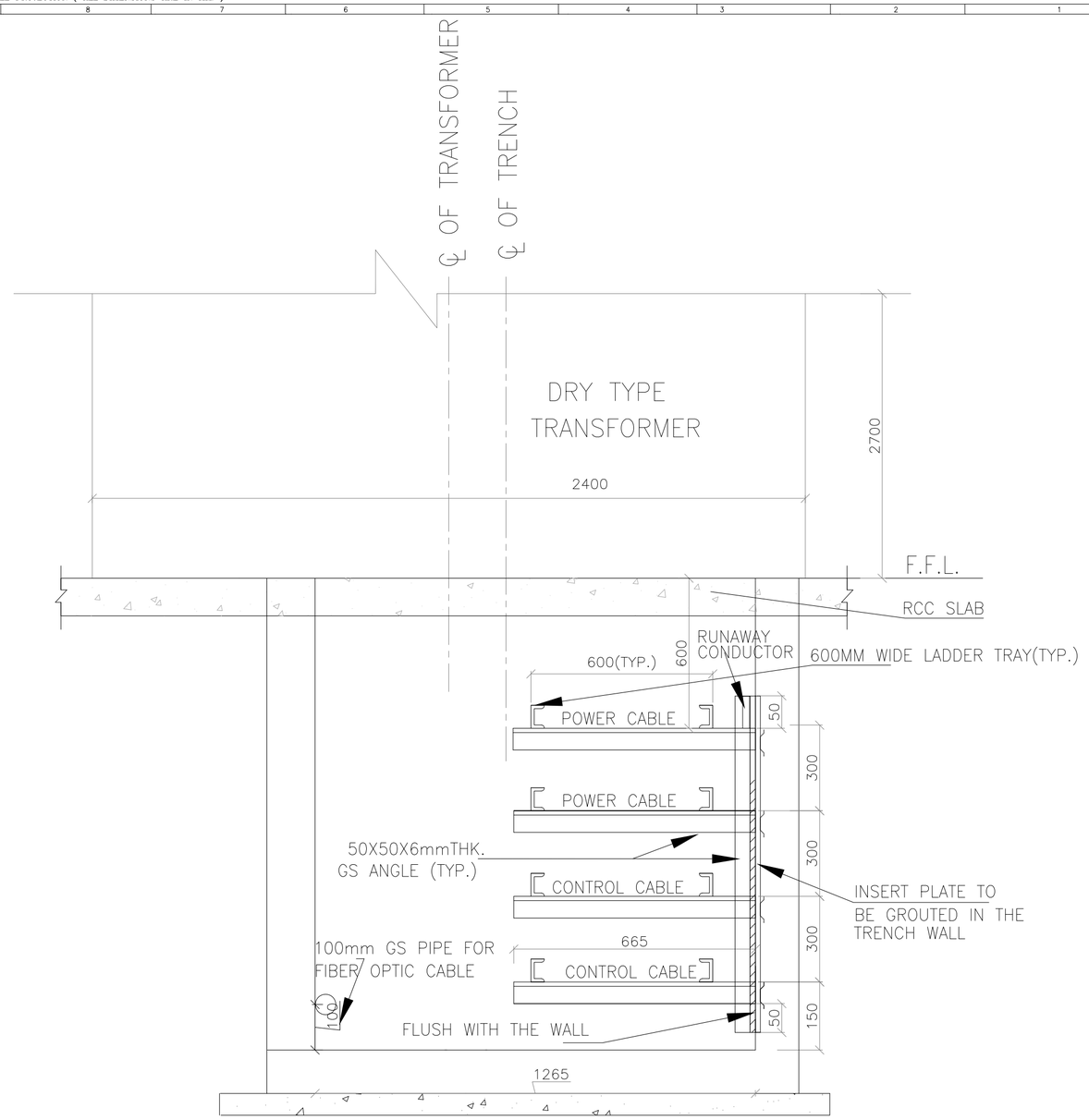

SECTION Z–Z OF TR–2B

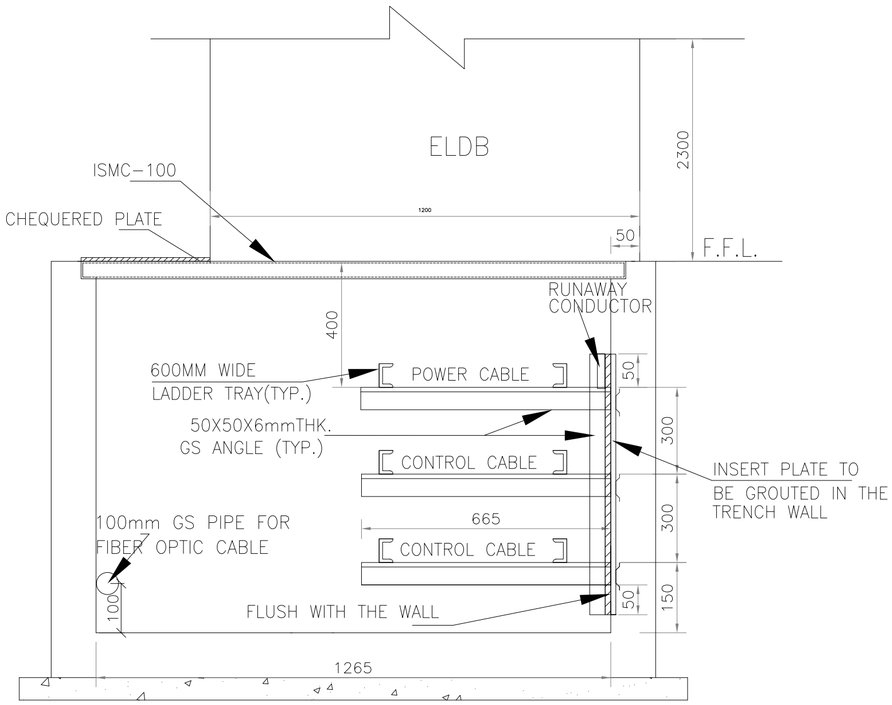

SECTION Y–Y OF TR–2A

ADDITIONAL INFORMATION
W.O.No.

STATUS OF DRAWING

DISTRIBUTION OF PRINTS

ग्राहक/परियोजना का नाम THE WEST BENGAL POWER DEVELOPMENT CORPN. LTD.

NAME OF CUSTOMER/PROJECT

(1X6600 MW) SAGARDIGHI THERMAL POWER EXTENTION PROJECT (UNIT 5)

NAME OF CONSULTANT

DEVELOPMENT CONSULTANTS PRIVATE LIMITED KOLKATA

बीएचईएल BHEL भारत हेवी इलेक्ट्रिकल्स लिमिटेड ट्रांसमिशन परियोजना विभाग
BHARAT HEAVY ELECTRICALS LTD.
TRANSMISSION PROJECTS DIVISION

	नाम /NAME	हस्ता./SIGN.	दि./DATE
बनाया DRAWN	NKT	-SD-	15.04.21
जाँचा CHECKED	MVK	-SD-	
स्वीकृत APPROVED	SKS	-SD-	

REV.	DATE	ALTERED / CHECKED / APPROVED	REV.	DATE	ALTERED / CHECKED / APPROVED	REV.	DATE	ALTERED / CHECKED / APPROVED	REV.	DATE	ALTERED / CHECKED / APPROVED	REV.	DATE	ALTERED / CHECKED / APPROVED	REV.	DATE	ALTERED / CHECKED / APPROVED	REV.	DATE	ALTERED / CHECKED / APPROVED	REV.	DATE	ALTERED / CHECKED / APPROVED
03	31.10.21	NKT / MVK / SKS	02	30.09.21	NKT / MVK / SKS	01	13.07.21	NKT / MVK / SKS															
ZONE	Drawing amended based on customers comment on Rev02		ZONE	Drawing amended based on customers comment on Rev01		ZONE	Drawing amended based on customers comment on Rev00																

विभाग DEPT.

कोड CODE

अनुपात / SCALE 1:110

कार्ड कोड CARD CODE

शीर्षक/TITLE

LAYOUT DWG. OF LT SWITCHGEAR ROOM AT SAGARDIGHI SUBSTATION

ड्राईंग क्र./DRAWING NO. TB-DG-445-316-E008

पुनः/REV. 03

पृष्ठ क्र./SHEET No. 03 अगला पृष्ठ/NEXT SHEET –

COPY RIGHT AND CONFIDENTIAL
The information on this document is the property of BHARAT HEAVY ELECTRICALS LIMITED
It must not be used directly or indirectly in anyway detrimental to the interest of the company.

COMPUTER DRG. PATH NAME :

REF. DRG. No.

SIGN. & DATE

INVENTORY No.

BHARAT HEAVY ELECTRICALS LIMITED

TRANSMISSION BUSINESS ENGINEERING MANAGEMENT

DOCUMENT No.	TB-DG-445-316-E010	**Rev no.-02**	Prepared	Checked	Approved
TYPE OF DOC.	**DESIGN DOCUMENT**	**NAME**	**NKT**	**MVK**	**SKS**
TITLE		**SIGN**	--do--	--do--	--do--
Electrical Equipment and cabling layout of Battery room for 400kV Sagardighi S/S		**DATE**	12.07.21	12.07.21	12.07.21
		GROUP	TBEM	**Job. No**	
CUSTOMER/ CONSULTANT	**The West Bengal Power Development Corporation Ltd. / Development Consultants Private Ltd. Kolkata**				
PROJECT	**1X660MW thermal power extension project Unit-5 at Sagardighi- 400KV Switchyard**				

CONTENT ***SHEETS***

1. Electrical Equipment and cabling layout of Battery cum DCDB room in 400KV Sagardighi switchyard 02

02	06.11.21	**NKT**	**MVK**	**SKS**	Document is amended based on customer's comments on rev01.
01	16.09.21	**NKT**	**MVK**	**SKS**	Document is amended based on customer's comments on rev00.
Rev No.	**Date**	**Altered**	**Checked**	**Approved**	**REVISION DETAILS**

Distribution	**To**	*TBTS*	*O/C*	*TBMM*	*TBQM*	*TBCM*
	Copies	**-**	**1**	**-**	**-**	**-**

FIRST ANGLE PROJECTION (ALL DIMENSIONS ARE IN MM.)

DRAWING No.

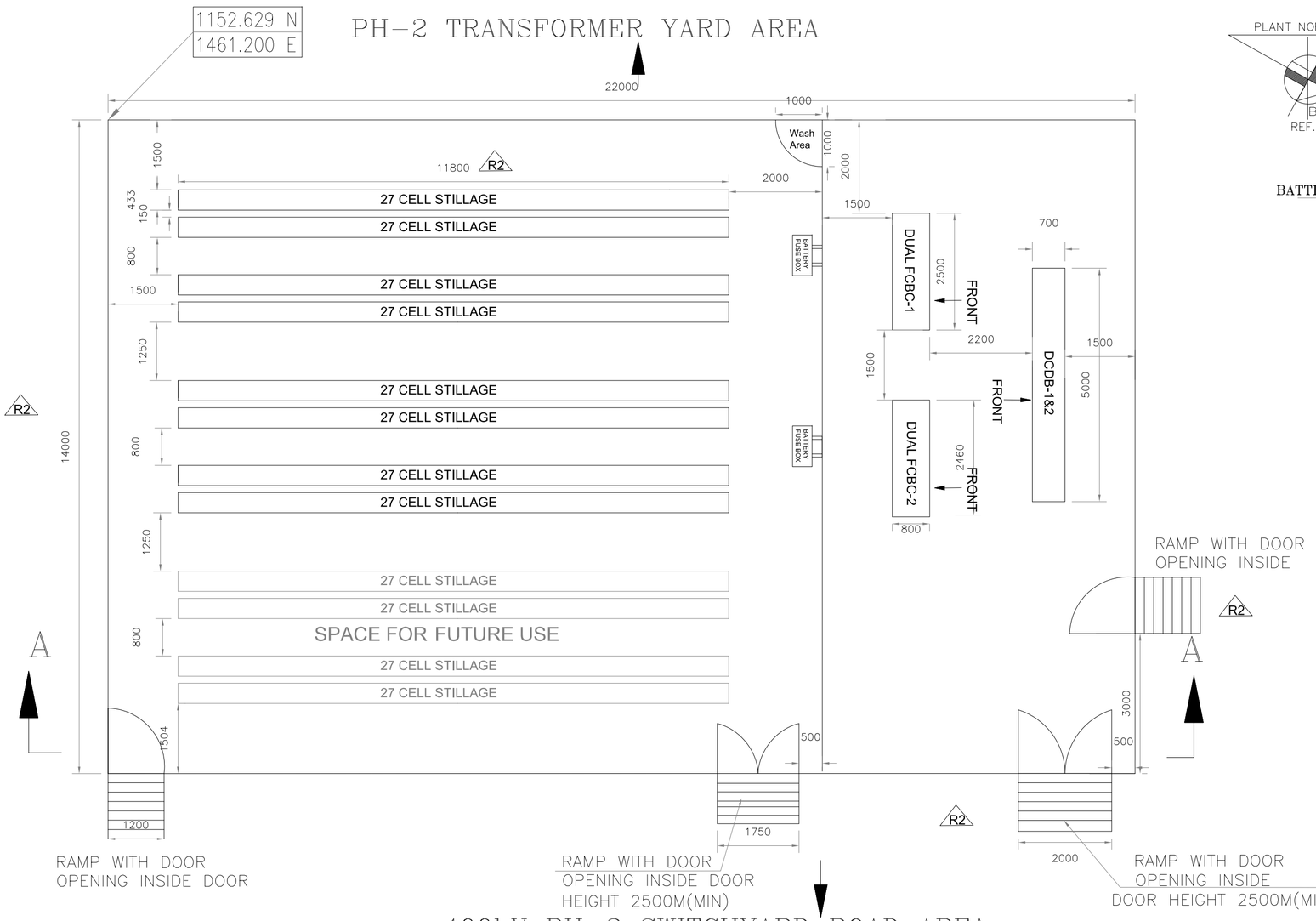

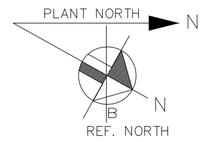

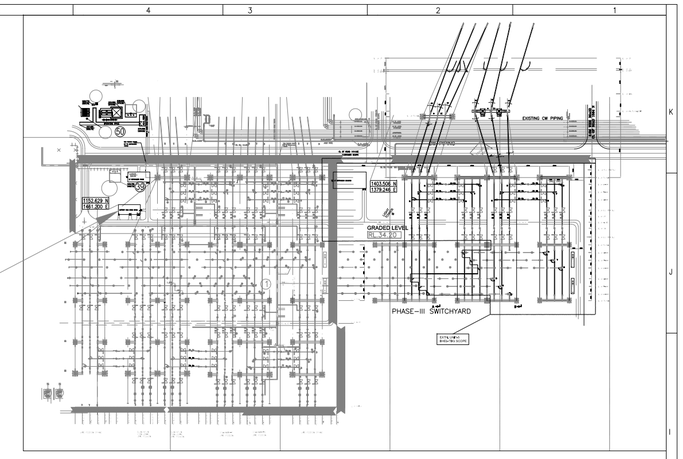

KEY PLAN

Forward final drawing with final dimension for final approval.

NOTES:-

1. ALL DIMENSION ARE IN mm.
2. THE DIMENSION AND ARRANGEMENT OF 2X100% BATTERY BANK , DCDB-MAIN & STANDBY AND DUAL FCBC1&2 ARE INDICATIVE AND SHALL BE FINALISED DURING DETAILED ENGINEERING.
3. EXHAUST (PULL TYPE) VENTILATION TO BE ADOPTED FOR THE BATTERY ROOM BY PROVIDING 2 x 100% BIFURCATED TYPE AXIAL FLOW EXAUST FANS WITH THE MOTOR OUTSIDE THE AIR STREAM. ONE OF THESE FANS WILL BE ACT AS STAND-BY.
4. ALL THE DIMENSIONS OF THE ROOM ARE INNER DIMENSIONS.
5. SEPARATE DRAWING SHALL BE SUBMITED FOR DETAILED ARCHITECTURE AND TRENCH LAYOUT OF NEW BATTERY ROOM.
6. PRESSURISED VENTILATION SYSTEM SHALL BE PROVIDED INSIDE THE CHARGER CUM DCDB ROOM.
7. PROTECTION/BAY CONTROL PANELS WILL BE LOCATED IN OUTDOOR SWITCHYARD BAY CONTROL ROOM.
8. CABLE TRAYS, ACCESSORIES AND CABLE TRAY SUPPORT SYSTEM SHALL BE HOT DIP GALVANISED MS. CABLE SUPPORT @ 1250 MM INTERVAL.
9. ▭ INDICATE PIPE CULVERT

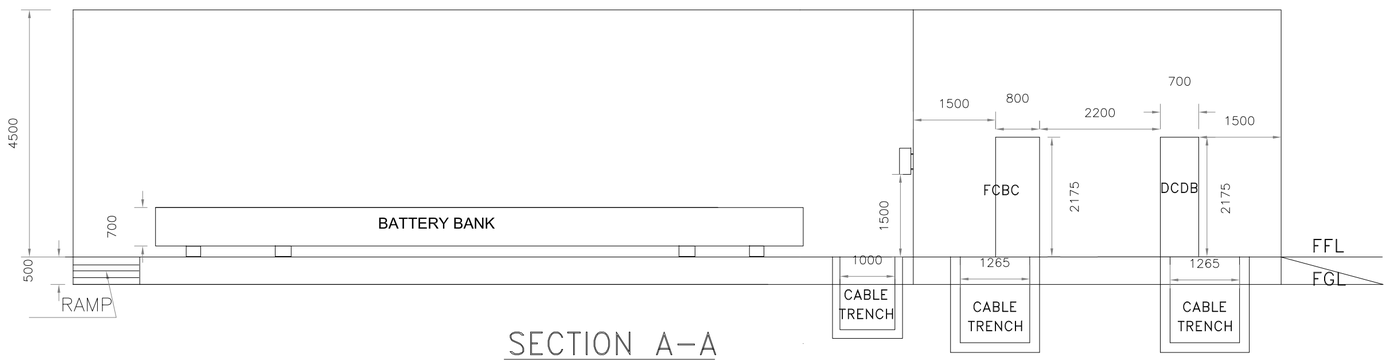

SECTION A-A

REV.	DATE	ALTERED / CHECKED / APPROVED	REV.	DATE	ALTERED / CHECKED / APPROVED	REV.	DATE	ALTERED / CHECKED / APPROVED	REV.	DATE	ALTERED / CHECKED / APPROVED	REV.	DATE	ALTERED / CHECKED / APPROVED	REV.	DATE	ALTERED / CHECKED / APPROVED	REV.	DATE	ALTERED / CHECKED / APPROVED
ZONE			ZONE			ZONE			ZONE			ZONE			ZONE			ZONE		

REV.	DATE	ALTERED / CHECKED / APPROVED	REV.	DATE	ALTERED / CHECKED / APPROVED
02	06.11.21	NKT / MVK / SKS	01	16.09.21	NKT / MVK / SKS
ZONE	CHANGES/AMENDMENTS WERE MADE BASED ON CUSTOMER'S COMMENTS ON REV01.		ZONE	CHANGES/AMENDMENTS WERE MADE BASED ON CUSTOMER'S COMMENTS ON REV00.	

ADDITIONAL INFORMATION W.O.No.

STATUS OF DRAWING

DISTRIBUTION OF PRINTS

গ্রাহক/পরিযোজনা কর্তৃপক্ষ THE WEST BENGAL POWER DEVELOPMENT CORPN. LTD.

NAME OF CUSTOMER/PROJECT

(1X660 MW) SAGARDIGHI THERMAL POWER EXTENTION PROJECT (UNIT 5)

NAME OF CONSULTANT

DEVELOPMENT CONSULTANTS PRIVATE LIMITED KOLKATA

ভারত হেভী ইলেকট্রিকাল্স লিমিটেড
সঞ্চালন পরিযোজনা বিভাগ
BHARAT HEAVY ELECTRICALS LTD.
TRANSMISSION PROJECTS DIVISION

	নাম /NAME	হস্তা./SIGN.	দি./DATE
তৈরি DRAWN	NKT		12.07.21
যাঁচা CHECKED	MVK		12.07.21
স্বীকৃত APPROVED	SKS		12.07.21

বিভাগ DEPT. | কোড CODE | অনুপাত / SCALE 1:110 | কার্ড কোড CARD CODE

শীর্ষক/TITLE
LAYOUT DWG. OF BATTERY ROOM AT SAGARDIGHI SUBSTATION

ড্রইং নং./DRAWING NO. TB-DG-445-316-E010

পুনঃ/REV. 2

পৃষ্ঠ নং./SHEET No. 01 | মোট পৃষ্ঠ/NEXT SHEET 02

COMPUTER DRG. PATH NAME :

REF. DRG. No.

SIGN. & DATE

INVENTORY No.

The information on this document is the property of BHARAT HEAVY ELECTRICALS LIMITED. It must not be used directly or indirectly to the detriment of the company.
COPY NOT VALID FOR CONTRACT.

FIRST ANGLE PROJECTION (ALL DIMENSIONS ARE IN MM.)

PH-2 TRANSFORMER YARD AREA

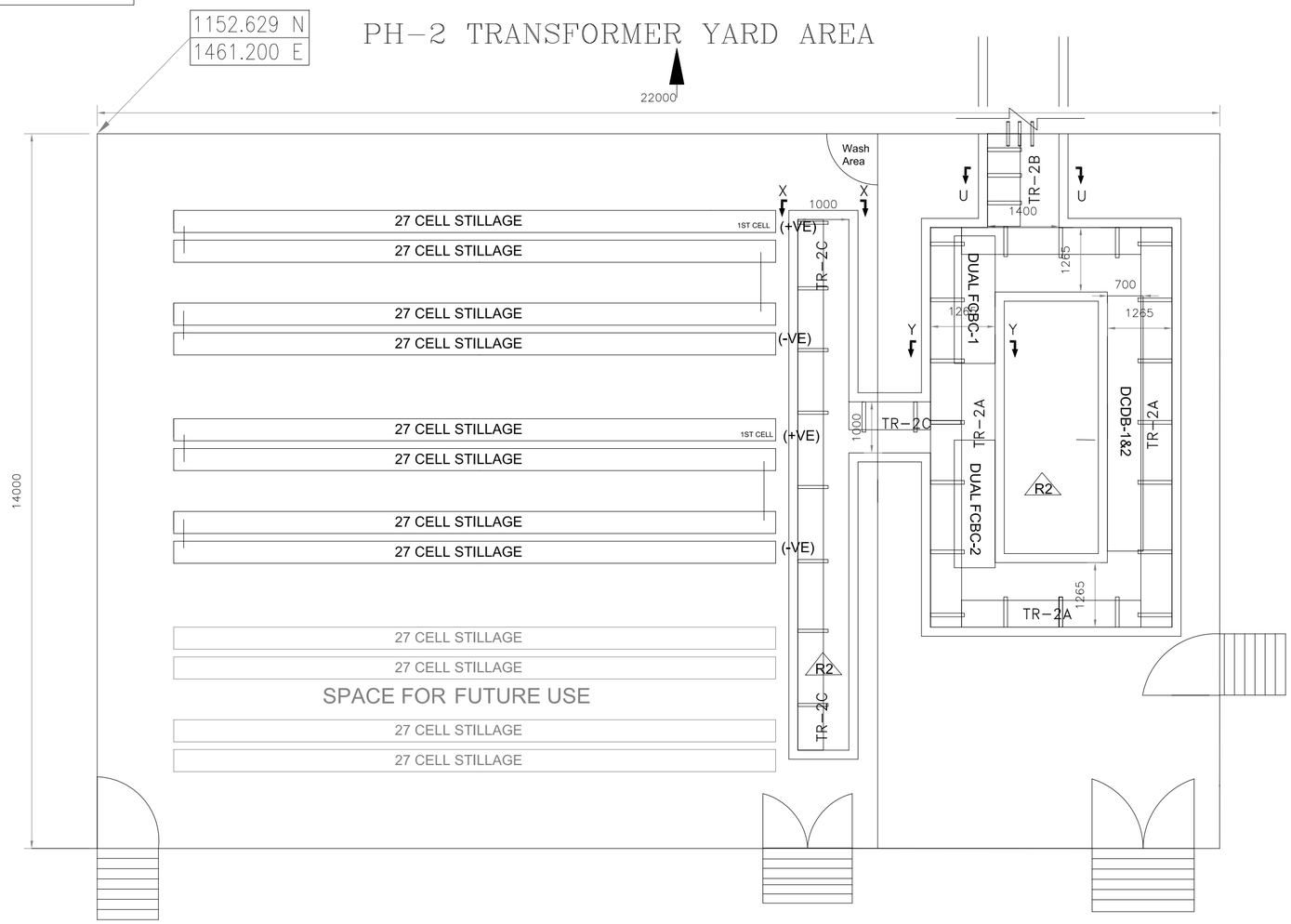

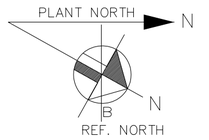

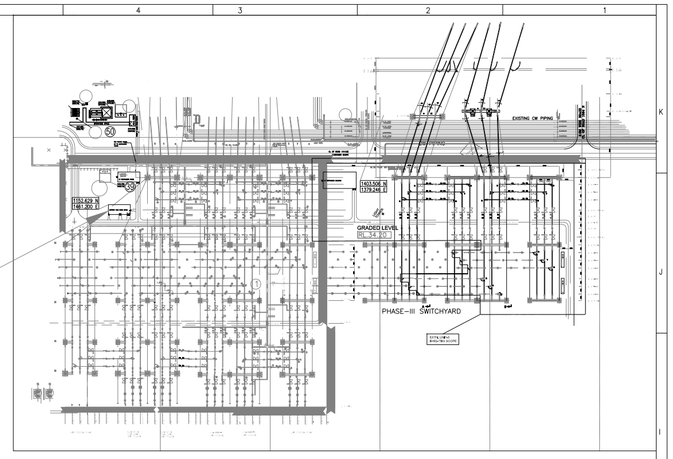

KEY PLAN

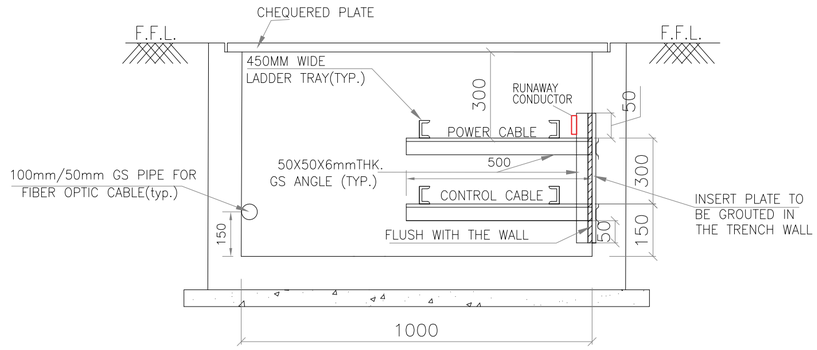

SECTION X-X OF TR-2C

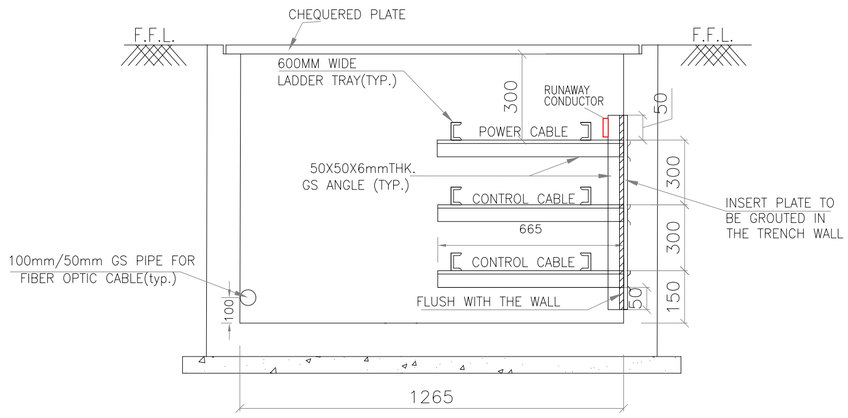

SECTION Y-Y OF TR-2A

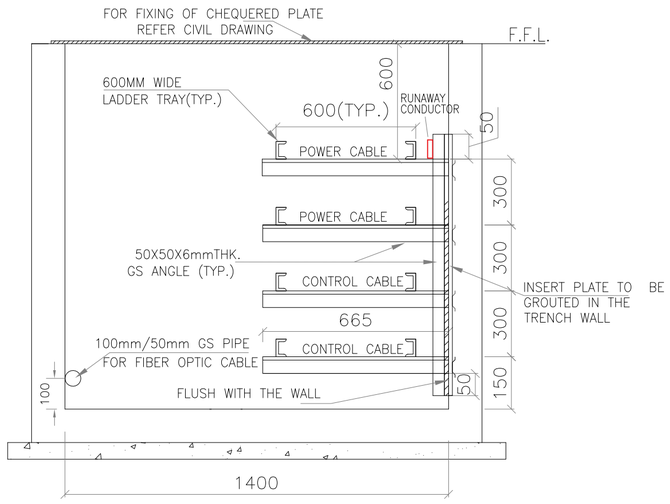

SECTION U-U OF TR-2B

REV.	DATE	ALTERED / CHECKED / APPROVED	REV.	DATE	ALTERED / CHECKED / APPROVED	REV.	DATE	ALTERED / CHECKED / APPROVED	REV.	DATE	ALTERED / CHECKED / APPROVED	REV.	DATE	ALTERED / CHECKED / APPROVED	REV.	DATE	ALTERED / CHECKED / APPROVED	REV.	DATE	ALTERED / CHECKED / APPROVED	REV.	DATE	ALTERED / CHECKED / APPROVED
ZONE			ZONE			ZONE			ZONE			ZONE			ZONE			ZONE			ZONE		

REV.	DATE	ALTERED / CHECKED / APPROVED	ZONE
02	06.11.21	NKT / MVK / SKS	CHANGES/AMENDMENTS WERE MADE BASED ON CUSTOMER'S COMMENTS ON REV01.
01	16.09.21	NKT / MVK / SKS	CHANGES/AMENDMENTS WERE MADE BASED ON CUSTOMER'S COMMENTS ON REV00.

ADDITIONAL INFORMATION W.O.No.

STATUS OF DRAWING

DISTRIBUTION OF PRINTS

ग्राहक/परियोजना का नाम NAME OF CUSTOMER/PROJECT: THE WEST BENGAL POWER DEVELOPMENT CORPN. LTD.

(1X660 MW) SAGARDIGHI THERMAL POWER EXTENTION PROJECT (UNIT 5)

NAME OF CONSULTANT: DEVELOPMENT CONSULTANTS PRIVATE LIMITED KOLKATA

भारत हेवी इलेक्ट्रिकल्स लिमिटेड
ट्रांसमिशन परियोजना विभाग
BHARAT HEAVY ELECTRICALS LTD.
TRANSMISSION PROJECTS DIVISION

	नाम /NAME	हस्ता./SIGN.	दि./DATE
DRAWN	NKT		12.07.21
CHECKED	MVK		12.07.21
APPROVED	SKS		12.07.21

विभाग DEPT. | कोड CODE | अनुपात / SCALE 1:110 | कार्ड कोड CARD CODE

शीर्षक/TITLE: LAYOUT DWG. OF BATTERY ROOM AT SAGARDIGHI SUBSTATION

ड्राईंग क्र./DRAWING NO. TB-DG-445-316-E010 | पुनः/REV. 2

पृष्ठ क्र./SHEET No. 02 | अगला पृष्ठ/NEXT SHEET --

COPY RIGHT AND CONFIDENTIAL
The information on this document is the property of BHARAT HEAVY ELECTRICALS LIMITED
It must not be used directly or indirectly in anyway detrimental to the interest of the company.

DRAWING No.

COMPUTER DRC. PATH NAME :

REF. DRG. No.

SIGN. & DATE

INVENTORY No.

REV.	DATE	Description	DRN.	PREPARED BY	CHECKED BY	APPROVED BY
02	20.10.21.	Drawing amended based on customer's comment on rev01 drawing		NKT	MVK.	SKS
01	04.08.21.	Drawing amended based on customer's comment on rev00 drawing		NKT	MVK.	SKS

NAME OF CUSTOMER/PROJECT

WBPDCL

THE WEST BENGAL POWER DEVELOPMENT CORPN. LTD.
(1x660 MW) SAGARDIGHI THERMAL POWER
EXTENTION PROJECT (UNIT 5)

NAME OF CONSULTANT

DEVELOPMENT CONSULTANTS PRIVATE LIMITED KOLKATA

BHARAT HEAVY ELECTRICALS LTD
UNIT: TRANSMISSION BUSINESS GROUP

COPY RIGHT AND CONFIDENTIAL
The information on this document is the property of BHARAT HEAVY ELECTRICAL LIMITED it must not be used directly or indirectly in any way deterimental to the interest of the company.

DEPT CODE		NAME	SIGN.	DATE
	DRN	PK		15.06.21
	DESN	NKT		SD
	CHD	MVK		SD
	APPD	SKS		SD

TITLE

EQUIPMENT & STRUCTURE EARTHING DETAILS FOR 400kV SAGARDIGHI UNIT-5

CV	ME	EL	I&C			DEPT.	SCALE NTS	BHEL DRG NO.		
						SIGN		TB-DG-445-316-E012		
						DATE		SHEETS. ENCLOSED.	SH. 01	REV. 02

GENERAL NOTES:

1. EARTH STRIP CLEATED TO EQUIPMENT STRUCTURE AT AN INTERVAL OF 750mm.
2. ALL ELECTRICAL EQUIPMENTS SHALL BE EARTHED BY TWO SEPARATE AND DISTINCT EARTH CONNECTIONS AND SHALL BE CONNECTED TO DIFFERENT CONDUCTORS OF EARTHING GRID.
3. THE MAIN GROUND GRID SHALL BE BURIED IN EARTH AT A MINIMUM DEPTH OF 1000MM BELOW GROUND LEVEL.
4. THE GROUND GRID CONDUCTOR BELOW GROUND LEVEL SHALL BE OF BARE 40MM ø MILD STEEL ROD. GROUND ELECTRODE SHALL BE 40MM ø X 3000 MM LONG MILD STEEL ROD, DRIVEN INTO THE GROUND AND CONNECTED TO THE GROUND GRID CONDUCTOR.
5. RISER/PIGTAIL FROM THE GROUND GRID SHALL BE 40MM ø MILD STEEL ROD AND SHALL PROJECT 300 MM ABOVE GROUND/CONCRETE FLOOR LEVEL.
6. ALL GROUND CONNECTIONS BELOW GROUND SHALL BE MADE BY ELECTRIC ARC WELDING WITH LOW HYDROGEN CONTENT ELECTRODE. BENDING OF THE CONDUCTOR WHERE NECESSARY SHALL BE DONE BY GAS HEATING.
7. GROUND CONDUCTOR CONNECTIONS ABOVE GROUND SHALL BE GENERALLY MADE BY ELECTRIC ARC WELDING. THE CONNECTION SHALL BE COATED WITH COLD GALVANISING/WEATHER RESISTANT PAINTS.
8. BOLTED CONNECTION SHALL BE MADE ONLY FOR GROUNDING OF EQUIPMENT/ DEVICES AND SOME REMOVABLE STRUCTURES. THE CONTACT SURFACES SHALL BE THOROUGHLY CLEANED BEFORE CONNECTION TO ENSURE GOOD ELECTRICAL CONTACT.
9. 40MMøX3000MM LONG MILD STEEL PIPE ELECTRODES SHALL BE PROVIDED AT CONNECTIONS WITH DRY TYPE TRANSFORMER NEUTRALS, LIGHTNING ARRESTERS, CVT NEUTRALS AND SHIELD WIRE TOWER IN TRANSFORMER YARD.
10. THE GROUNDING INSTALLATION WORK SHALL CONFORM TO THE REQUIREMENTS OF THE INDIAN ELECTRICITY RULES AND CODE OF PRACTICE FOR EARTHING (IS:3043) AS AMENDED UP-TO-DATE IN INDIA.
11. 40 DIA MS ROD RISERS SHOULD BE BROUGHT CLOSE TO EQUIPMENTS FOUNDATION.
12. EARTH WIRE DOWN CONDUCTOR SHALL BE CLEATED AT AN INTERVAL OF 1500MM ALONG WITH STRUCTURE.
13. FOR WELDING DETAILS REFER SHHET NO. 18,19,20 AND 21.

DRAWING DETAIL

SHEET NO.	DESCRIPTION
03.	400kV SF6 CIRCUIT BREAKER
04.	400KV CVT
05.	400kV POST INSULATOR (SOLID CORE TYPE)
06.	360kV LIGHTNING ARRESTER
07.	MARSHALLING KIOSK
08.	400kV HORIZONTAL DOUBLE BREAK ISOLATOR WITH ONE EARTH SWITCH
09.	TOWER WITH SHIELD WIRE
9A.	TOWER WITH SHIELD WIRE IN TRANSFORMER YARD
10.	400kV CURRENT TRANSFROMER
11.	CABLE TRENCH
12.	DETAIL OF GROUND ROD ELECTRODE
13.	DRY TYPE LT TRANSFORMER
14.	AUXILIARY EARTH MAT FOR ISOLATOR MAIN MECH., E/S MECH. BOX & CB CONTROL CABINET
15.	SWITCHGEAR / PMCC /RELAY PANEL.
16.	FENCE POST
17.	TYPICAL ARRANGEMENT OF BOLTED JOINTS
18.	WELDING DETAILS
19.	WELDING DETAILS
20.	WELDING DETAILS
21.	WELDING DETAILS

LEGEND

→ CONNECTION TO GROUND MAT THROUGH RISER.

● RISER

बीएचईएल BHEL

EQUIPMENT EARTHING DETAILS

GENERAL NOTES, LEGENDS & DWG. LIST

COMPUTERREF.NO.	DRG. No.	TB-DG-445-316-E012	REV. 02	SHEET No. 02

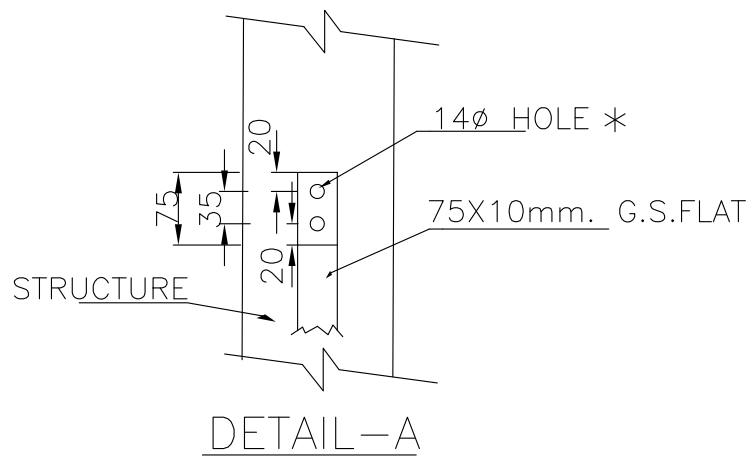

DETAIL–A

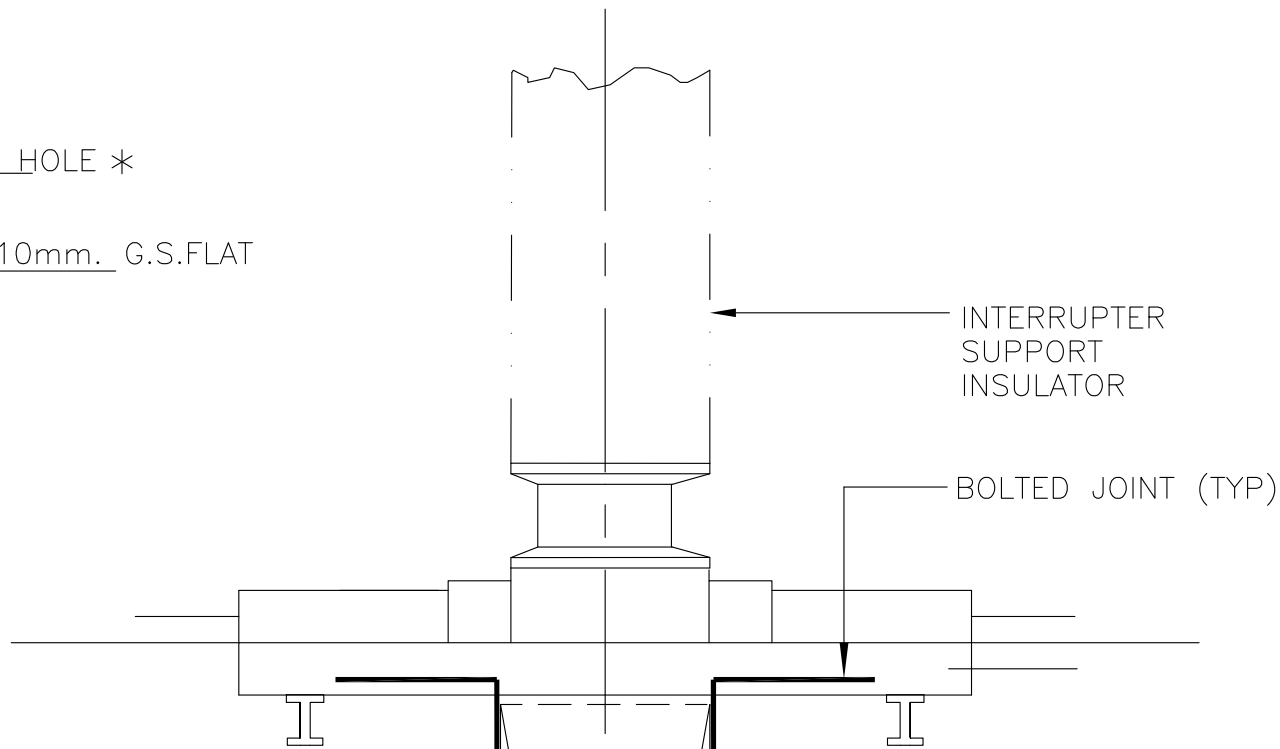

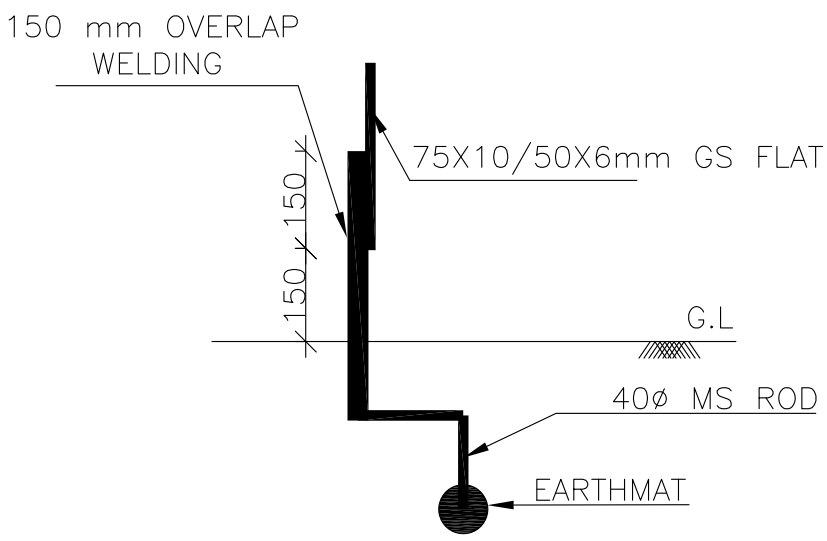

DETAIL B

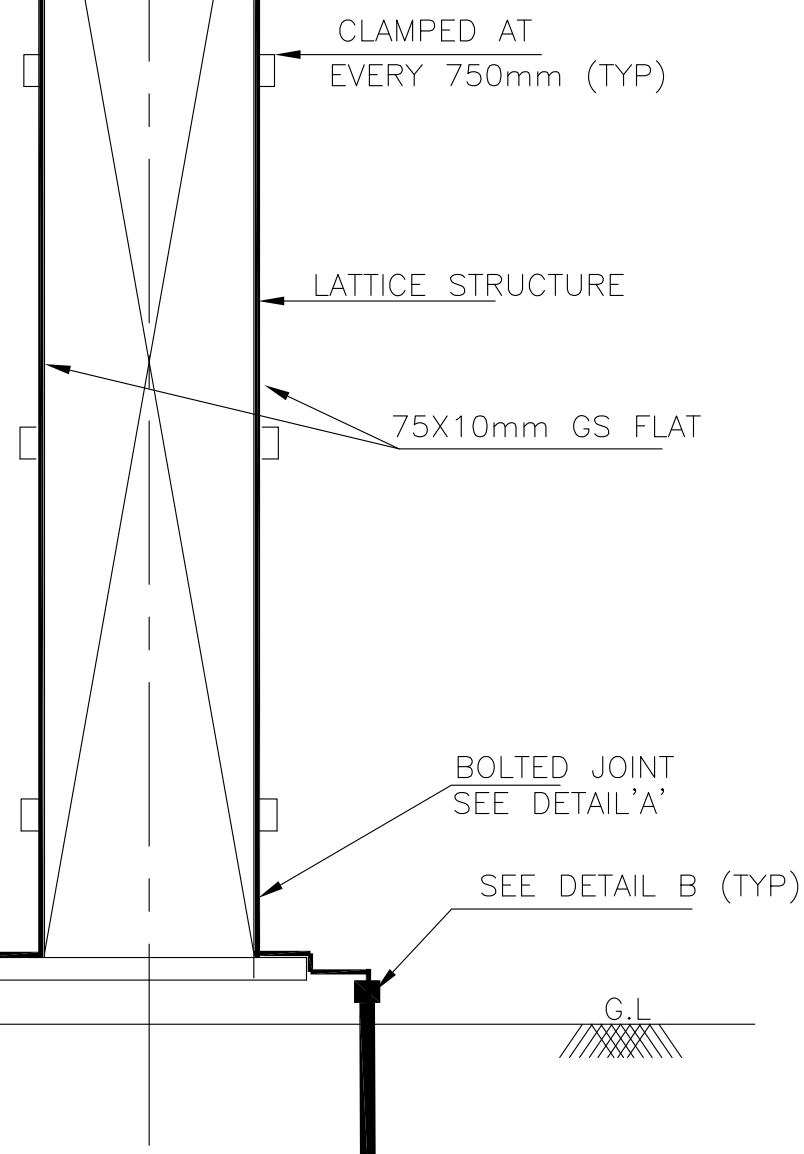

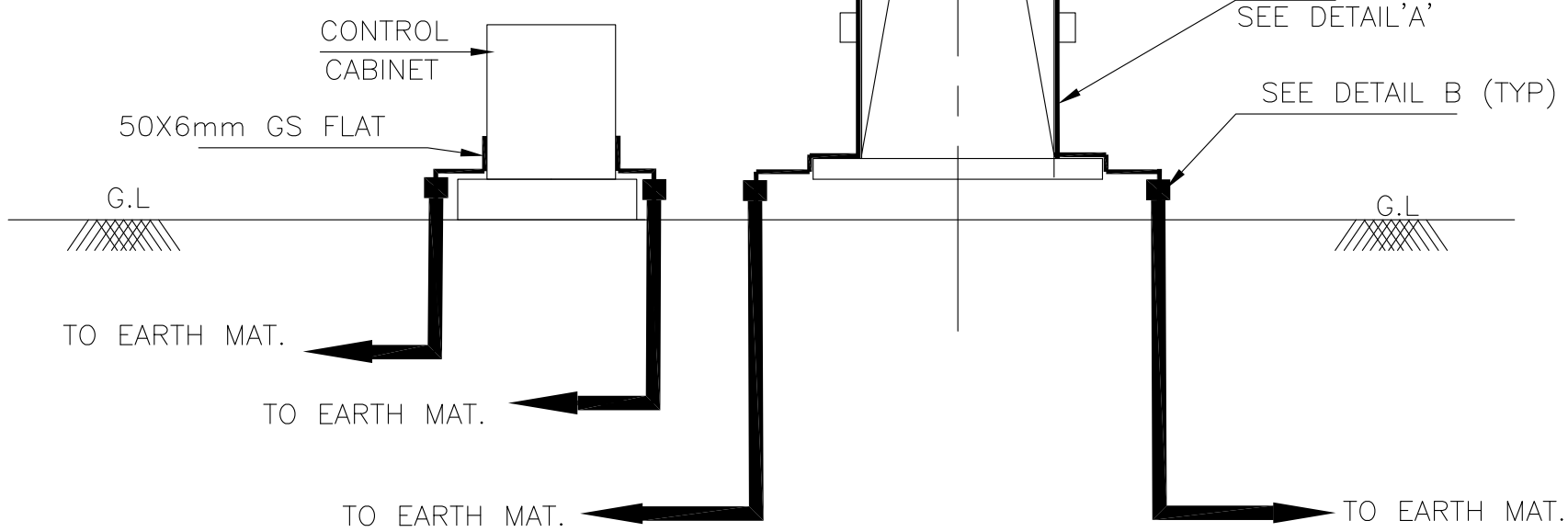

NOTE:

1) * BOLT SIZE AND HOLE SIZE SHALL BE TO SUIT RESPECTIVE EQPT./STRUCTURE.
2) NO. OF RISERS PER CIRCUIT BREAKER =2 NOS./PHASE
3) NO. OF RISERS FOR CONTROL CABINET= 2 NOS.
4) NO. OF RISERS FOR PLATFORM = 2 NOS. PER PLATFORM.
5) AUXILIARY EARTHMAT SHALL BE PROVIDED BELOW CONTROL CABINET OF CB (REFER SHEET. NO. 14).

बीएचईएल BHEL	EQUIPMENT & STRUCTURE EARTHING DETAILS 400kV SF6 CIRCUIT BREAKER		
COMPUTERREF.NO.	DRG. No. TB–DG–445–316–E012	REV. 02	SHEET No. 3

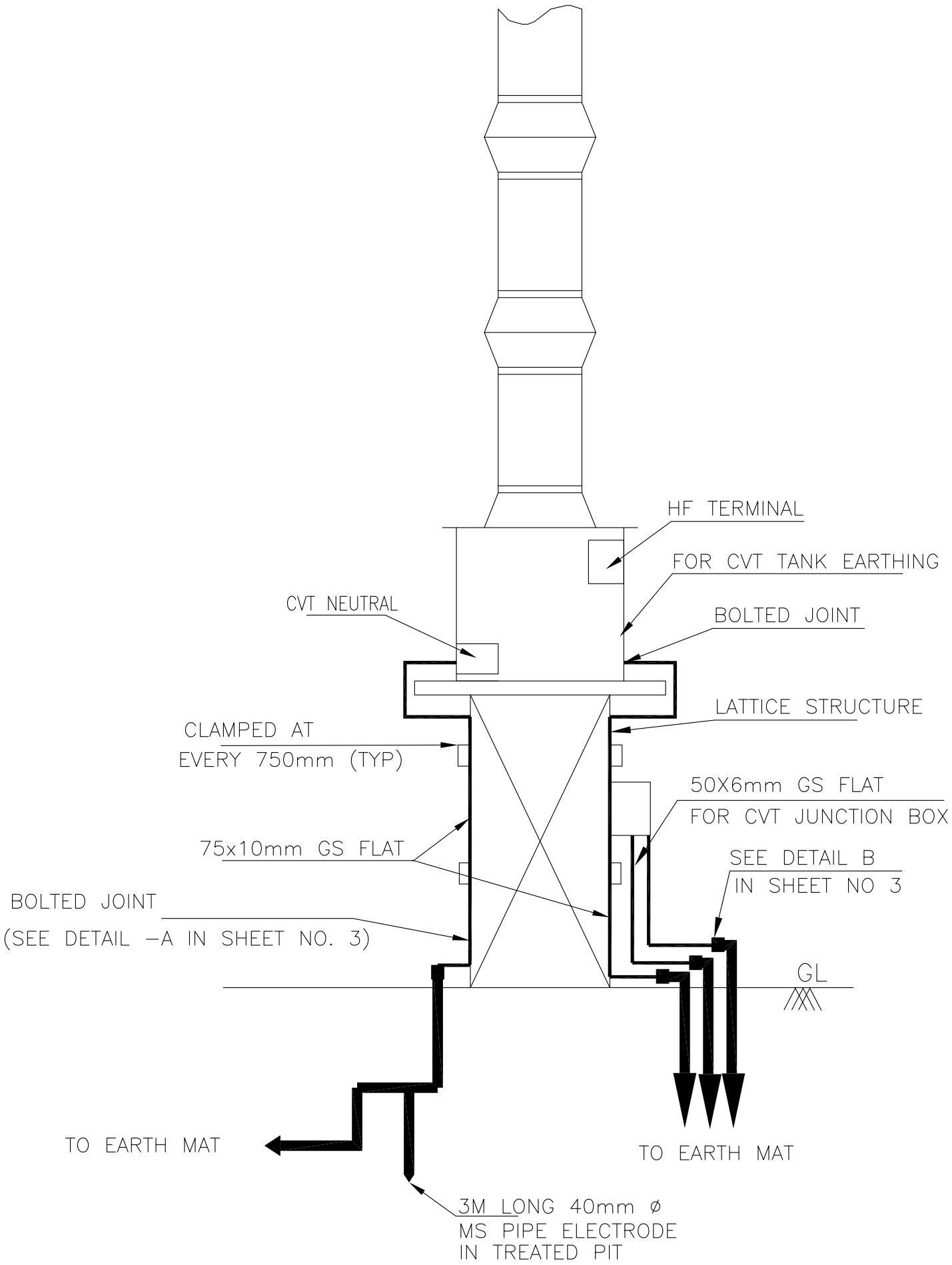

NOTE:

(1) PIPE ELECTRODE = 1 NOS./PHASE

(2) NO. OF RISERS = 2 NOS PER PHASE FOR CVT

(3) NO. OF RISERS FOR CVT JUNTION BOX =2 NOS.

बीएचईएल BHEL	EQUIPMENT & STRUCTURE EARTHING DETAILS 400KV CVT		
COMPUTERREF.NO.	DRG. No. TB–DG–445–316–E012	REV. 02	SHEET No. 4

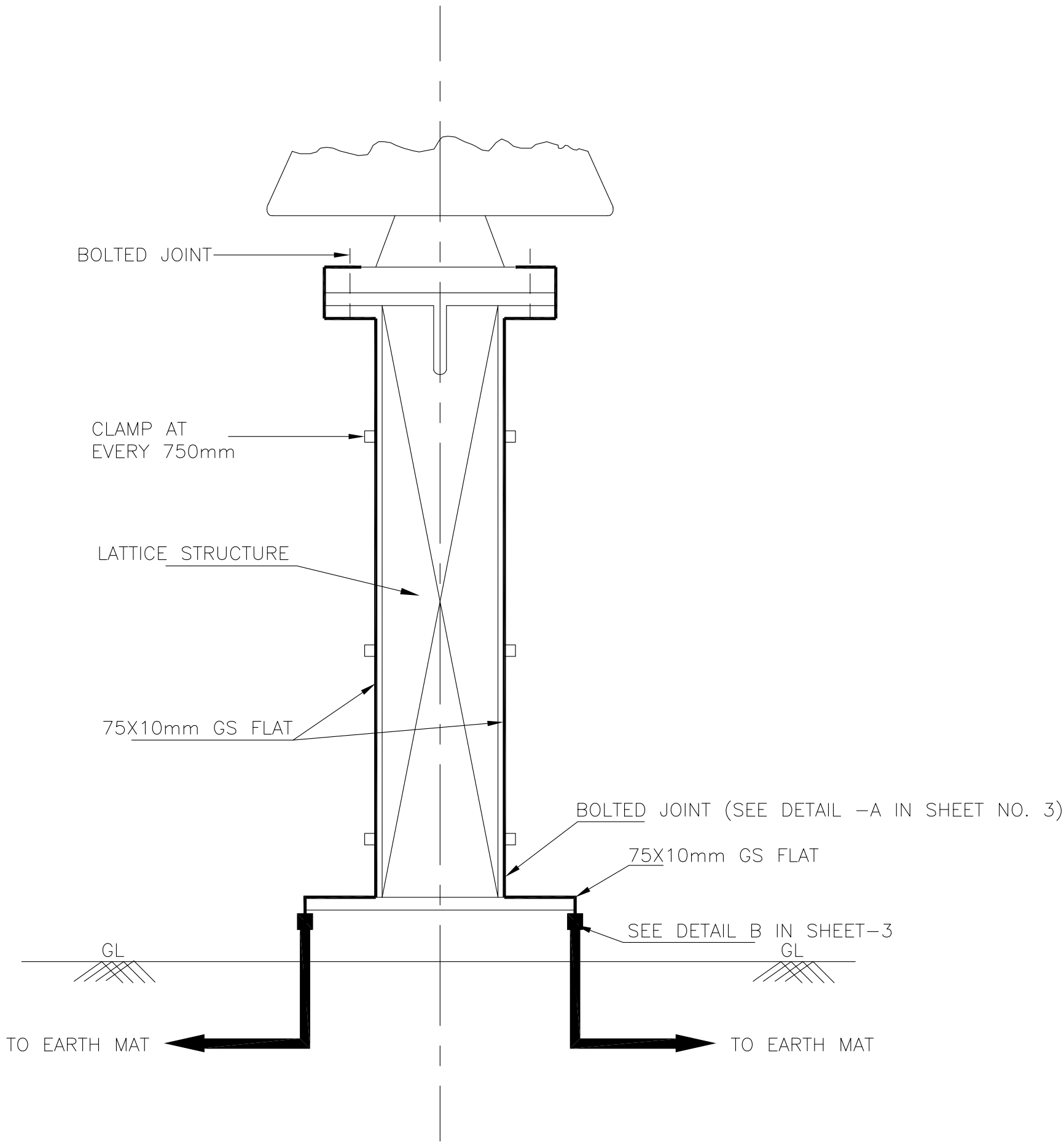

NOTE:

(1) NO. OF RISERS = 2 NOS./PHASE

बीएचईएल BHEL	EQUIPMENT & STRUCTURE EARTHING DETAILS 400KV POST INSULATOR (SOLID CORE TYPE)		
	DRG. No. TB–DG–445–316–E012	REV. 02	SHEET No. 5

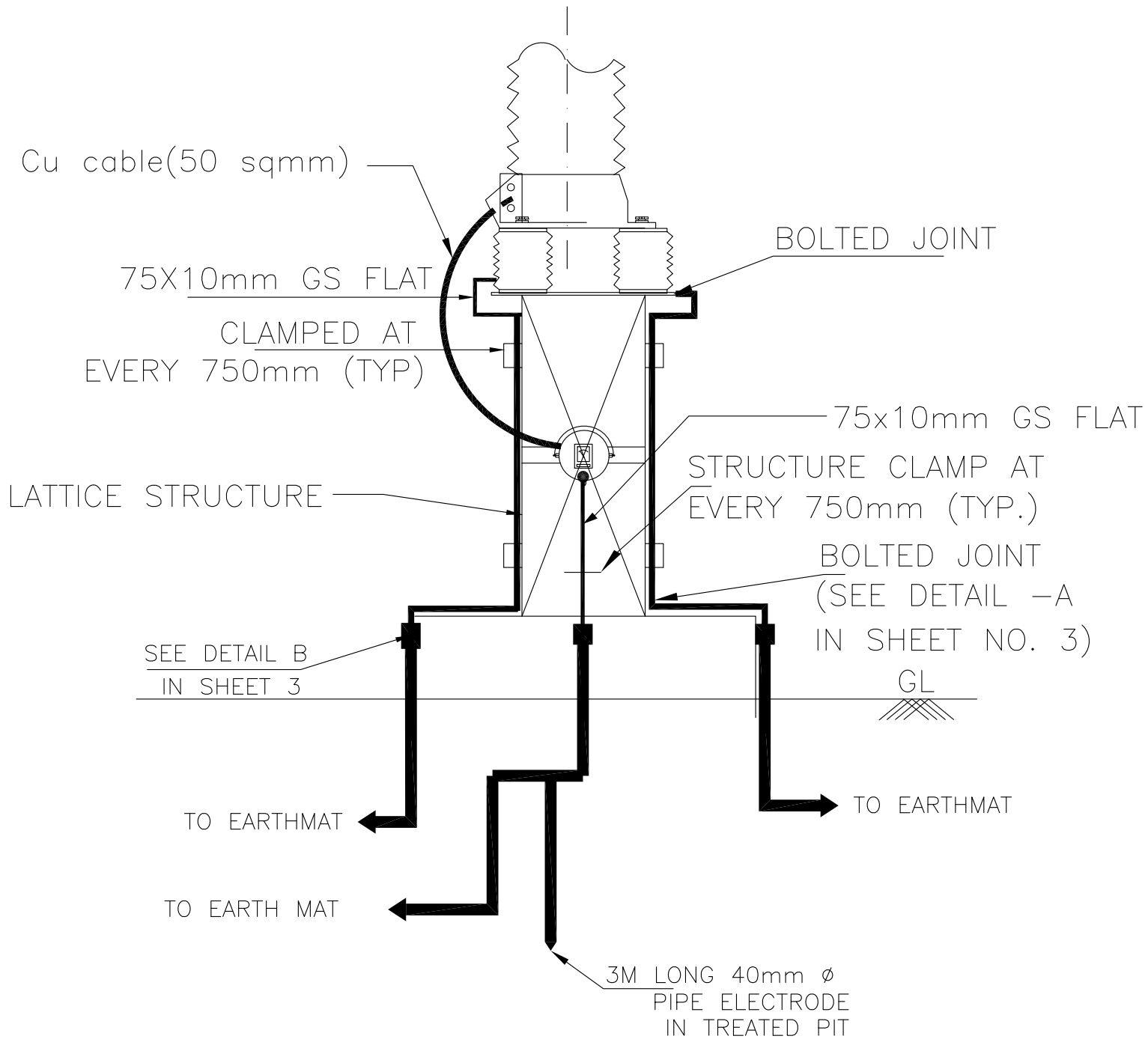

NOTES;

1. LA SHALL BE EARTHED THROUGH EARTH TERMINAL OF SURGE COUNTER
2. NO. OF PIPE ELECTRODE 1 NO. PER PHASE,
3. NO. OF RISERS= 3 NOS. PER PHASE

बीएचईएल BHEL	EQUIPMENT & STRUCTURE EARTHING DETAILS LIGHTNING ARRESTER(360kV)		
COMPU. DRG. REF.	DRG.NO. TB–DG–445–316–E012	REV. 02	SHEET No. 6

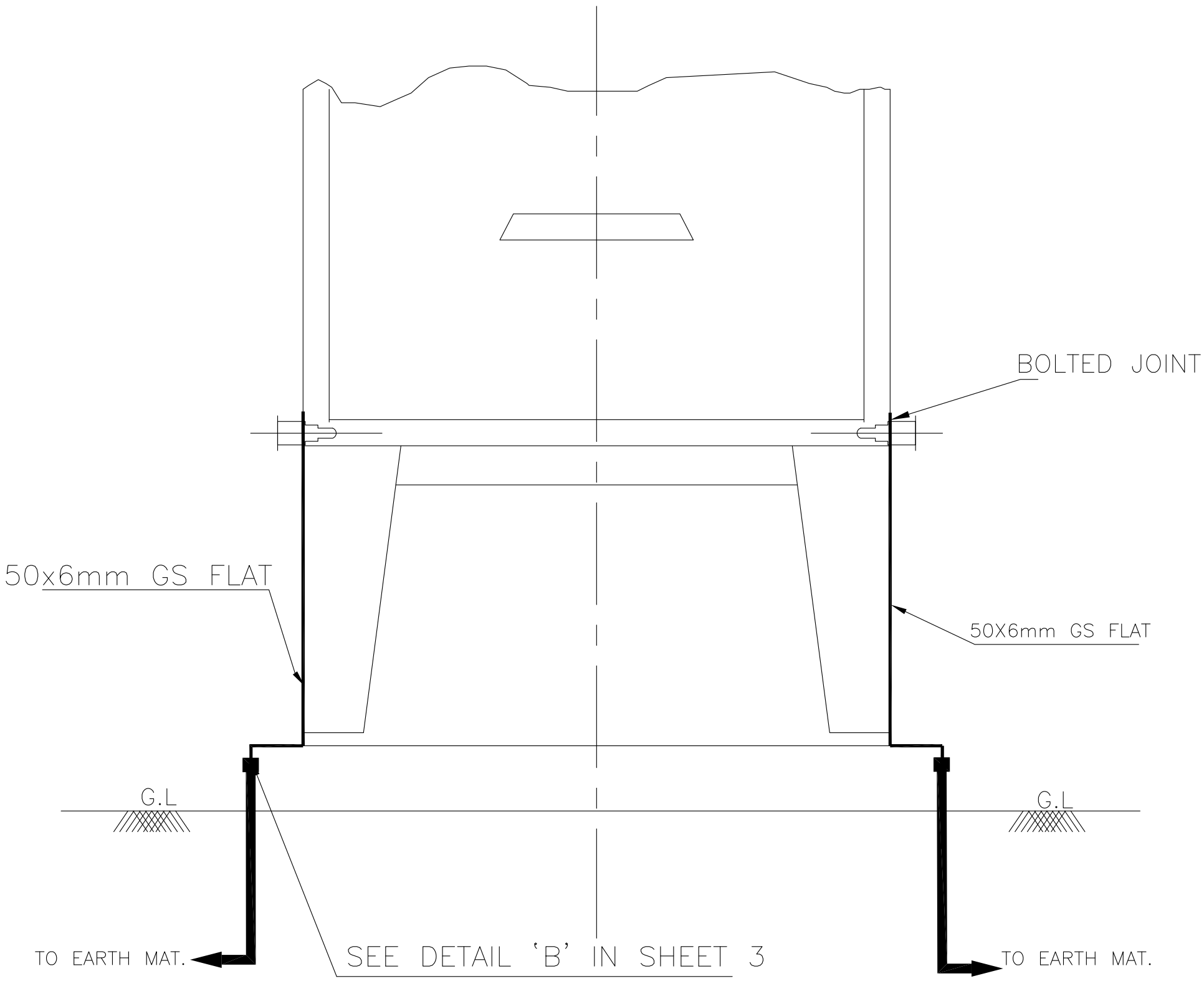

NOTES;

1. NO. OF RISERS= 2NOS.

बीएचईएल BHEL	EQUIPMENT & STRUCTURE EARTHING DETAILS MARSHALLING KIOSK			
COMPUTERREF.NO.	DRG. No.	TB-DG-445-316-E012	REV. 02	SHEET No. 7

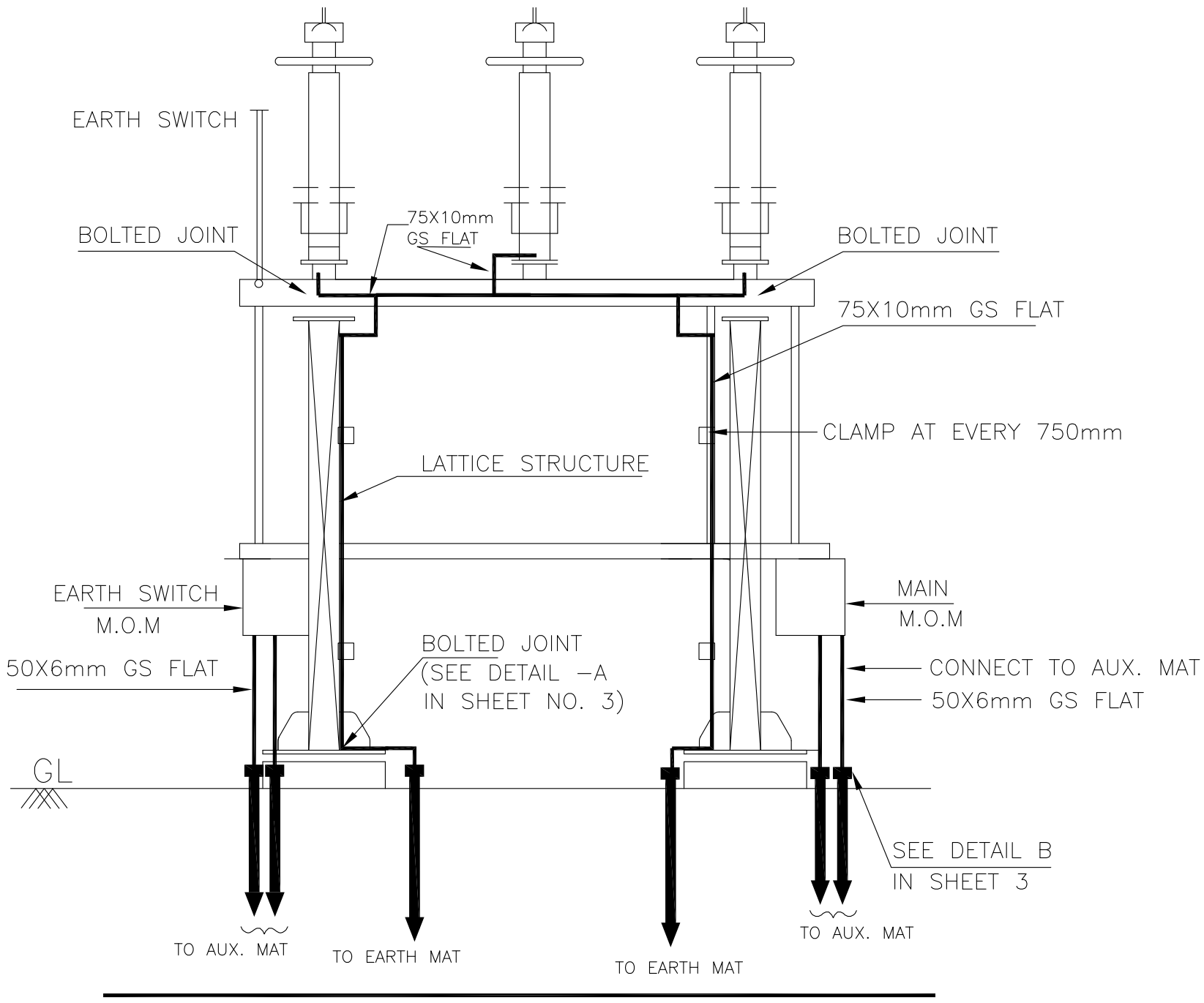

NOTES

1. AUXILIARY EARTH MAT SHALL BE PROVIDED BELOW EVERY MOM BOX (REFER SHEET 14)
2. NO. OF RISERS FOR ISOLATOR = 2 NOS./PHASE
3. NO. OF RISERS FOR MAIN MECHANISM BOX = 2 NOS.
4. NO. OF RISERS FOR EARTH SWITCH MECHANISM BOX = 2 NOS.
5. LOCATION OF AUXILIARY EARTHMAT & MECHANISM BOX IS INDICATIVE ONLY. IT SHALL BE EXECUTED AS PER ACTUAL NUMBER/POSITION OF MECHANISM BOX.

बीएचईएल BHEL	EQUIPMENT & STRUCTURE EARTHING DETAILS 400KV HDB ISOLATOR (TYPICAL) WITH ONE EARTH SWITCH		
COMPUTERREF.NO.	DRG. No. TB–DG–445–316–E012	REV. 02	SHEET No. 8

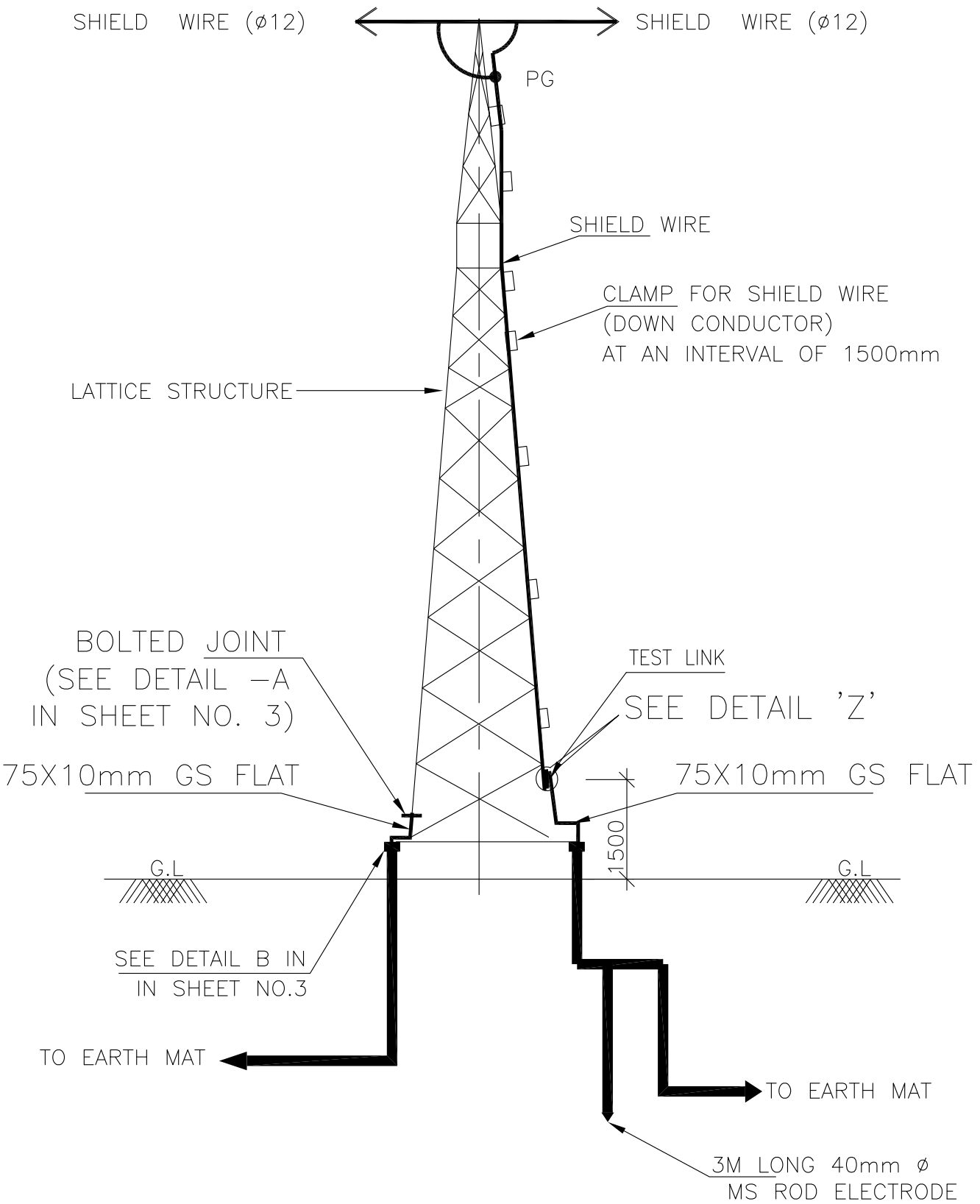

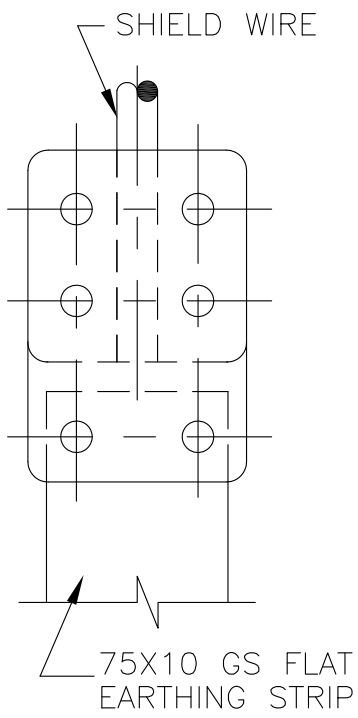

DETAIL – Z

NOTE:

1. NO. OF ROD ELECTRODE : 1 NO. PER TOWER WITH DOWN CONDUCTOR.
2. NO. OF RISERS 2 NOS. / TOWER
3. CLAMP BETWEEN SHIELD WIRE & 75x10MM GS FLAT WILL WORK AS A TEST LINK.

बीएचईएल BHEL	EQUIPMENT & STRUCTURE EARTHING DETAILS TOWER WITH SHIELD WIRE			
COMPUTERREF.NO.	DRG. No.	TB–DG–445–316–E012	REV. 02	SHEET No. 9

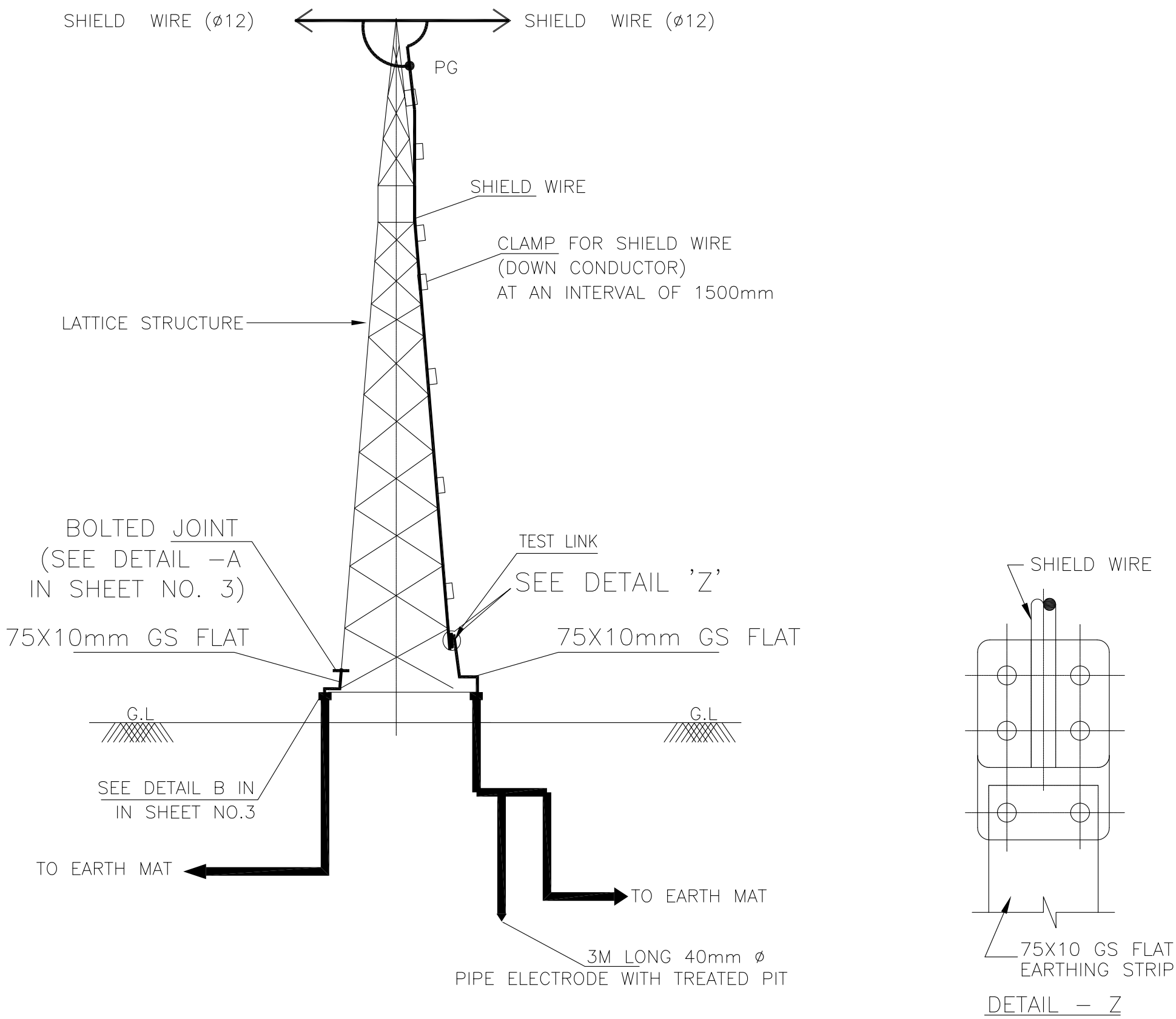

NOTE:

1. NO. OF PIPE ELECTRODE : 1 NO. PER TOWER WITH DOWN CONDUCTOR.
2. NO. OF RISERS 2 NOS. / TOWER
3. CLAMP BETWEEN SHIELD WIRE & 75x10MM GS FLAT WILL WORK AS A TEST LINK.

बीएचईएल BHEL	EQUIPMENT & STRUCTURE EARTHING DETAILS TOWER WITH SHIELD WIRE IN TRANSFORMER YARD		
COMPUTERREF.NO.	DRG. No. TB–DG–445–316–E012	REV. 02	SHEET No. 9A

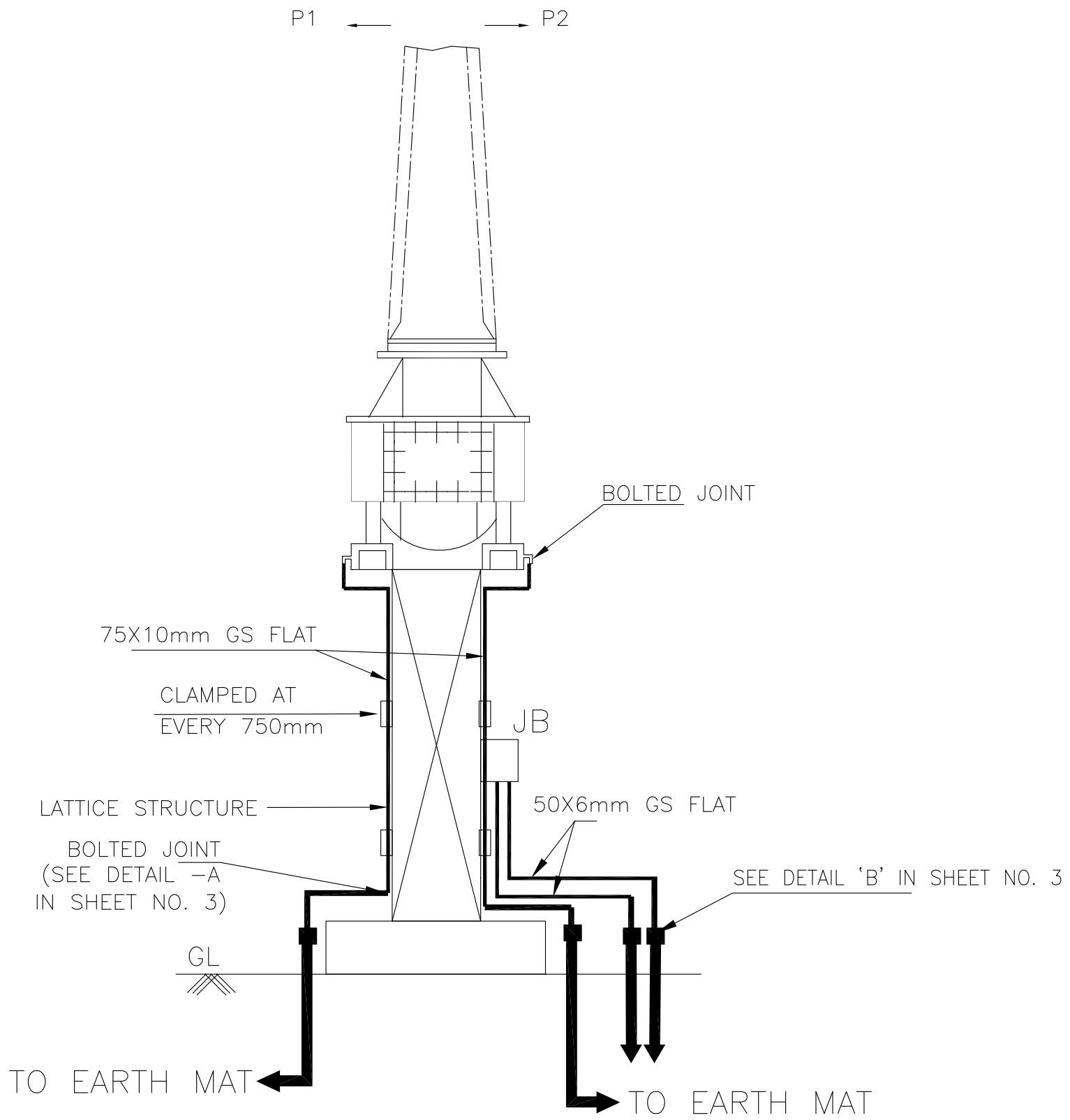

NOTE:

1. NO. OF RISERS=2 NOS./PHASE
2. NO. OF RISERS FOR JUNCTION BOX=2 NOS.

	EQUIPMENT & STRUCTURE EARTHING DETAILS 400KV CURRENT TRANSFORMER		
COMPU. DRG. REF.	DRG.NO. TB–DG–445–316–E012	REV. 02	SHEET No. 10

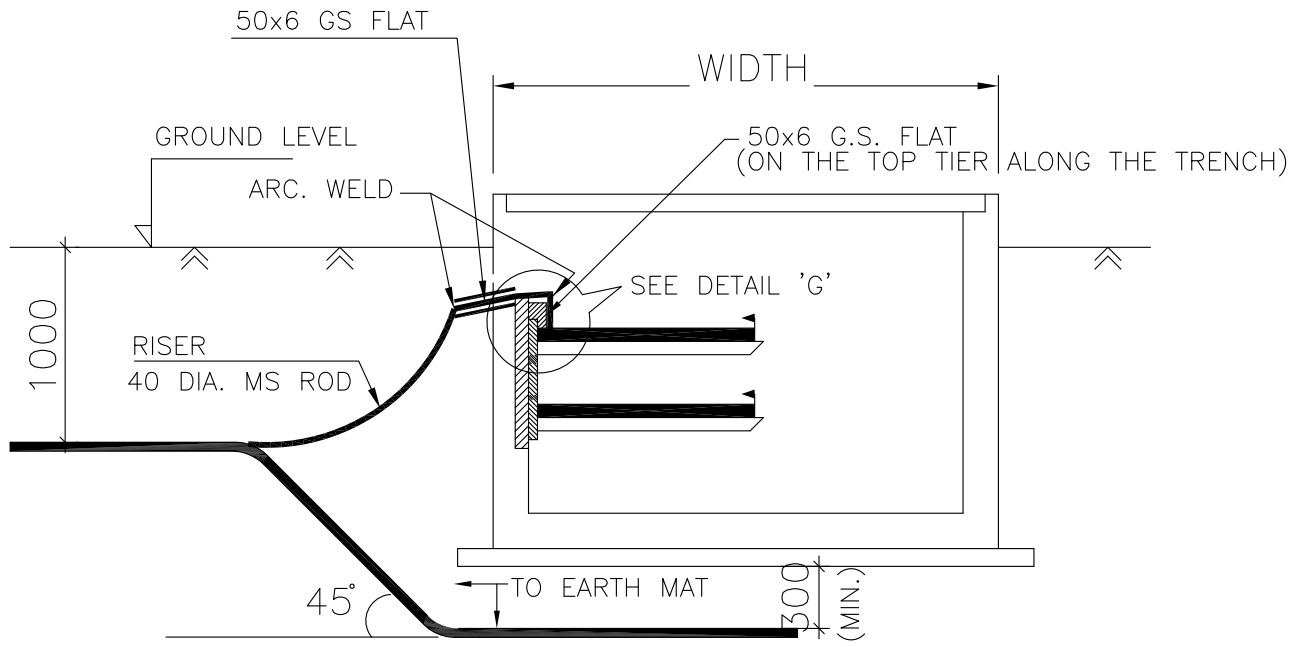

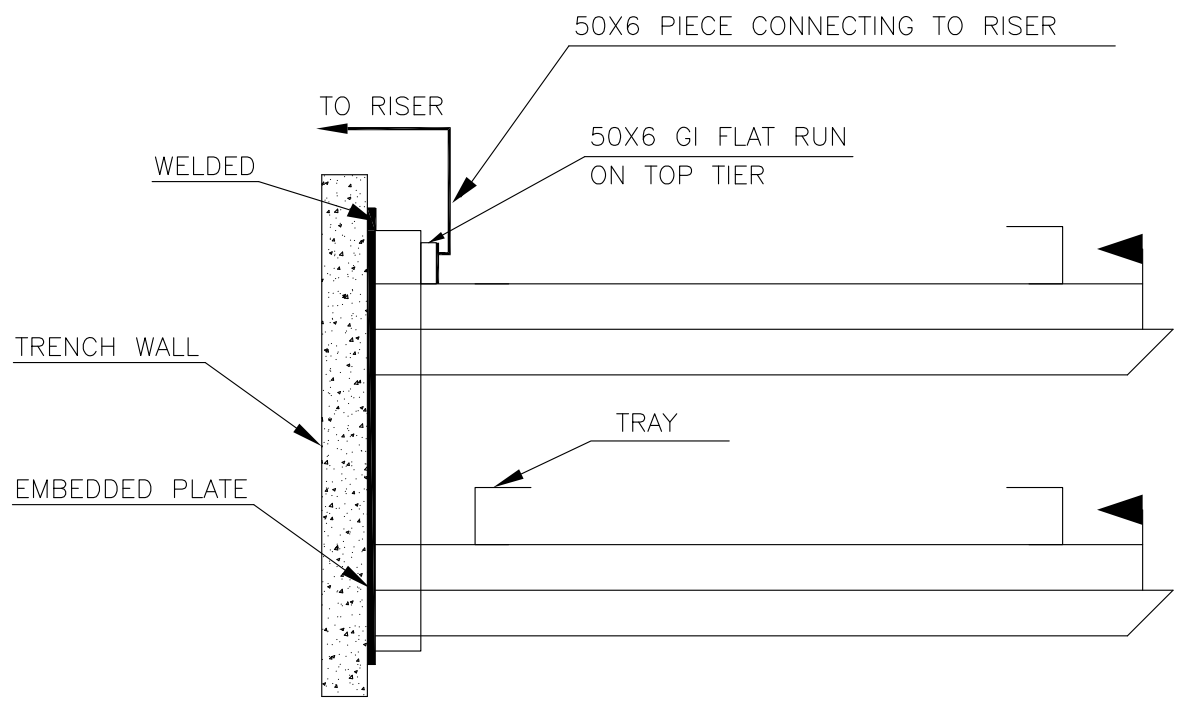

DETAIL 'G'

DETAIL FOR CONNECTING GS FLAT RUNNING ON TOP TIER TRENCH TO RISER.

NOTE:

1. ALL TRENCHES SHALL BE EARTHED AT AN INTERVAL OF 10M ALONG THE LENGTH OF TRENCH.
2. THE EARTH STRIP (50x6 G.S. FLAT) SHALL RUN ON THE TOP TIER ALONG THE CABLE TRENCHES & WELDED TO EACH OF THE RACK AT EVERY 1.5M INTERVAL.
3. WHERE THE CABLE RACKS ARE PROVIDED ON BOTH SIDES OF THE TRENCH, BOTH SIDES SHALL BE EARTHED.

बीएचईएल BHEL	EQUIPMENT & STRUCTURE EARTHING DETAILS CABLE TRENCH		
COMPU. DRG. REF.	DRG. NO. TB-DG-445-316-E012	REV. 02	SHEET 11

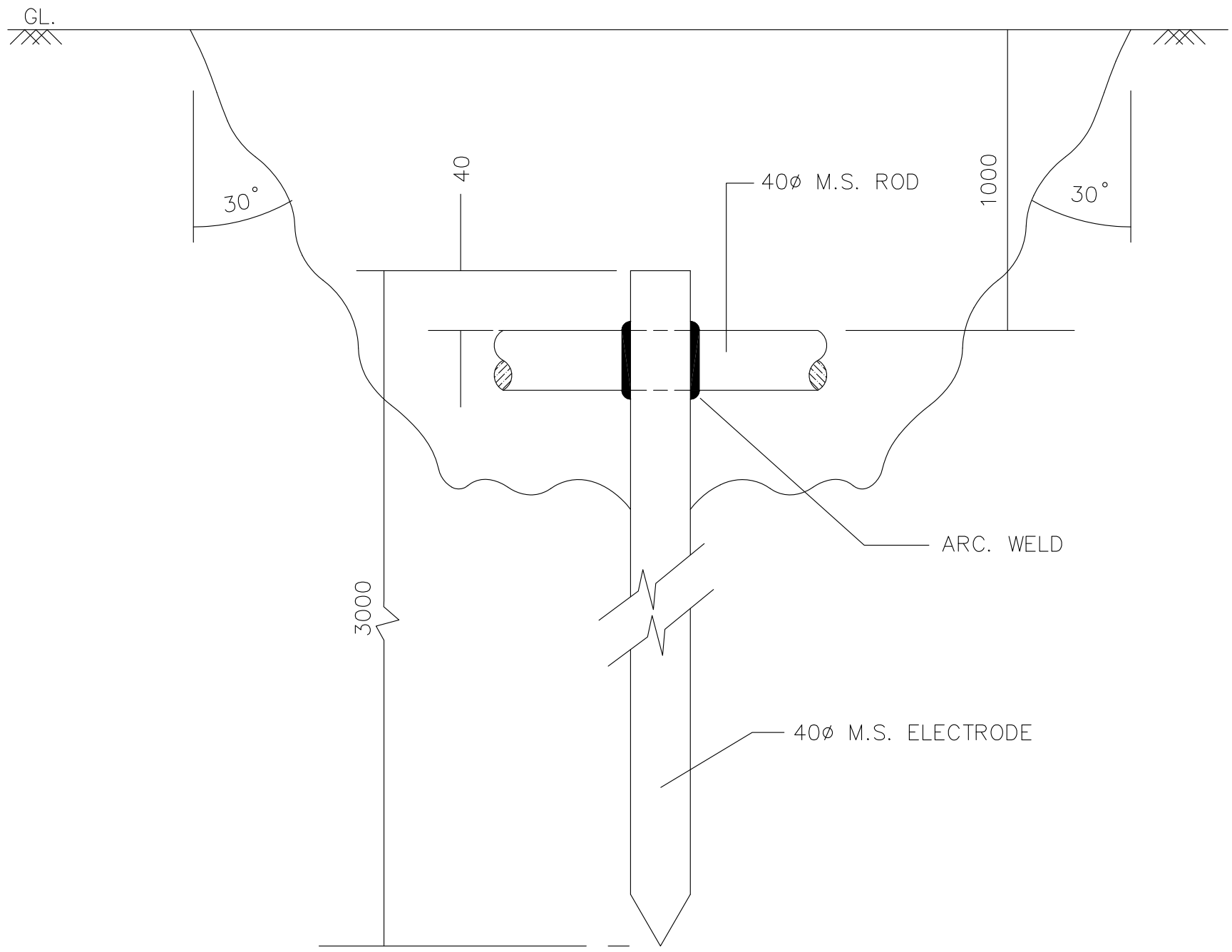

GROUND ROD ELECTRODE

बीएचईएल BHEL	EQUIPMENT & STRUCTURE EARTHING DETAILS GROUND ROD ELECTRODE		
COMPU. DRG. REF.	DRG. NO. TB-DG-445-316-E012	REV. 02	SHEET 12

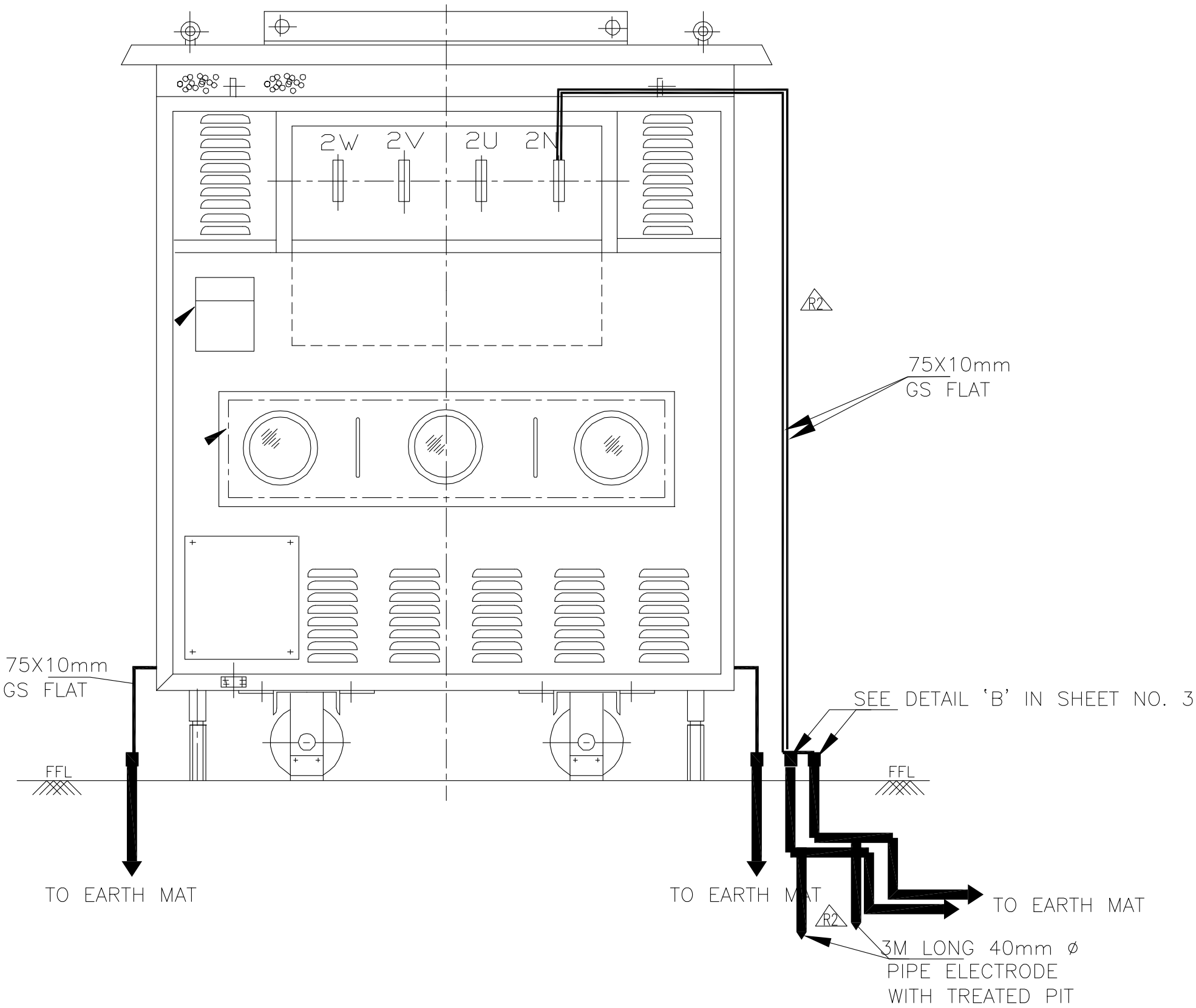

NOTE:

1. NO. OF RISERS = 4 NOS.
2. NO. OF PIPE ELECTRODE FOR NEUTRAL = 2 NO.

बीएचईएल BHEL	EQUIPMENT & STRUCTURE EARTHING DETAILS DRY TYPE LT TRANSFORMER		
	DRG. No. TB-DG-445-316-E012	REV. 02	SHEET No. 13

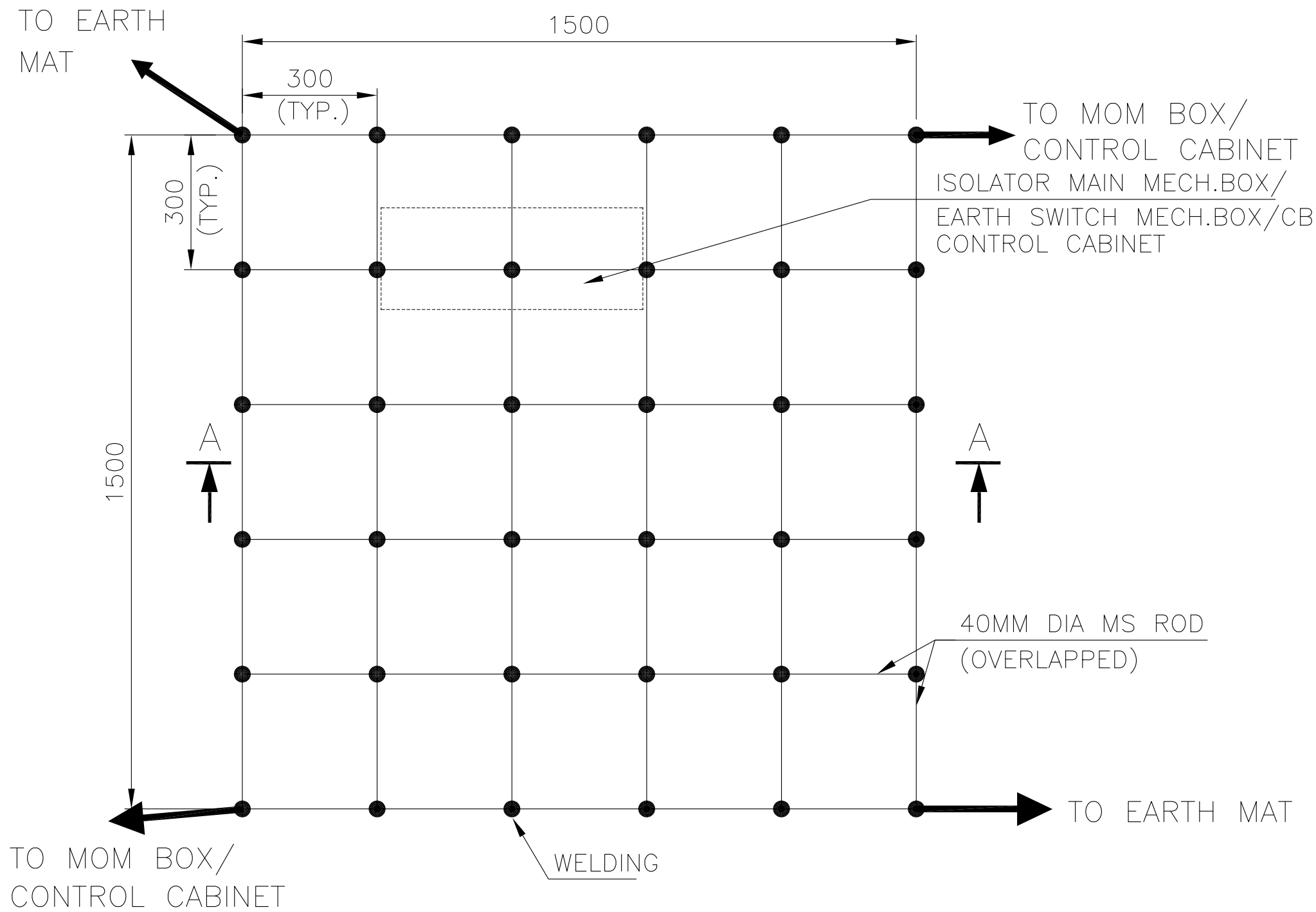

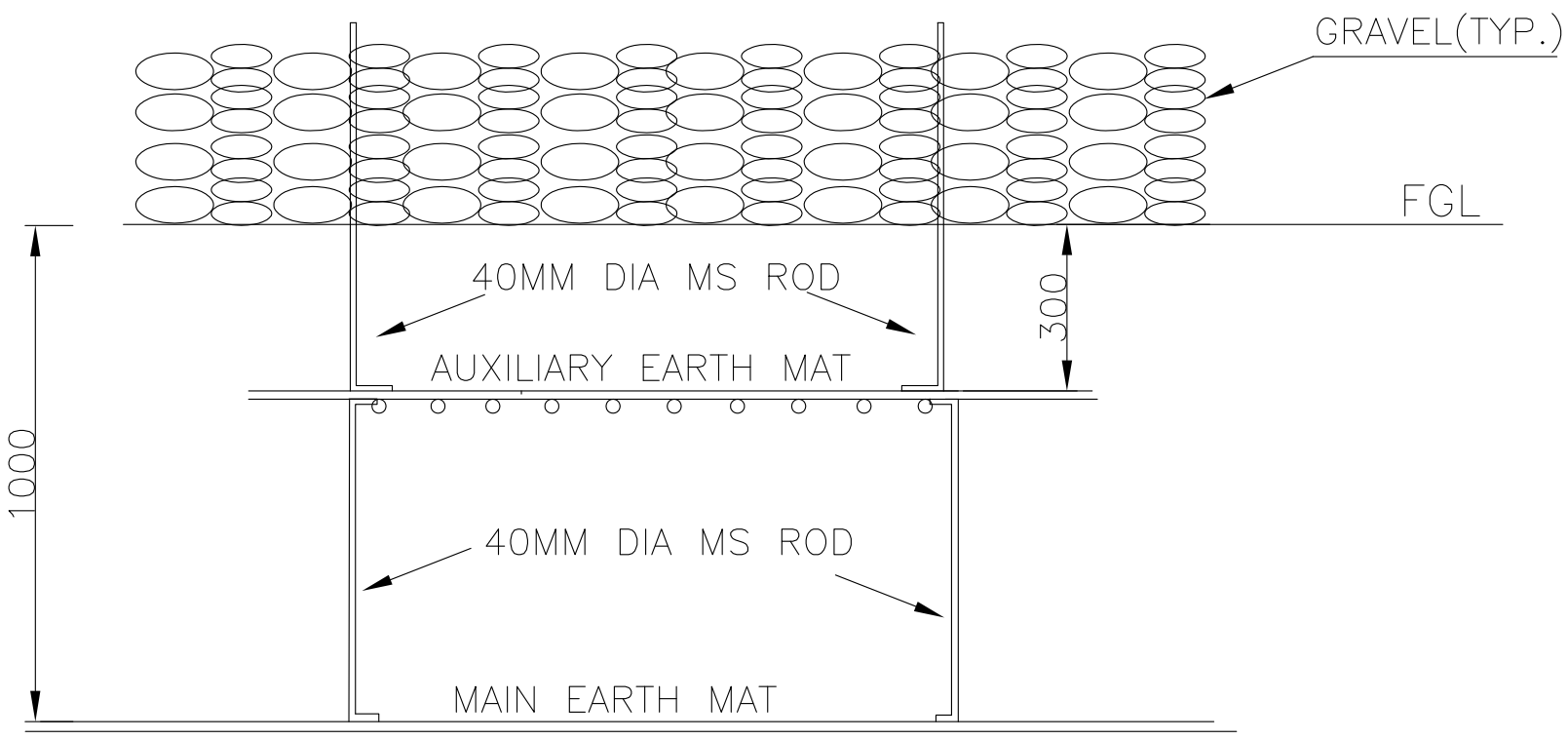

SECTION AA

NOTE:

AUX. EARTH MAT SHALL BE SO POSITIONED THAT THE FOOT OF THE OPERATOR ALWAYS LIE OVER THE AUX. EARTH MAT AREA WHILE ATTENDING / OPERATING THE MECH. BOX THE CABLE TRENCH ROUTING SHALL BE PLANNED ACCORDINGLY.

बीएचईएल BHEL	EQUIPMENT & STRUCTURE EARTHING DETAILS AUXILIARY EARTH MAT FOR ISOLATOR MAIN MECH.,E/S MECH. BOX/CB CONTROL CABINET		
COMPU. DRG. REF.	Report No. TB-DG-445-316-E012	REV. 02	SHEET No. 14

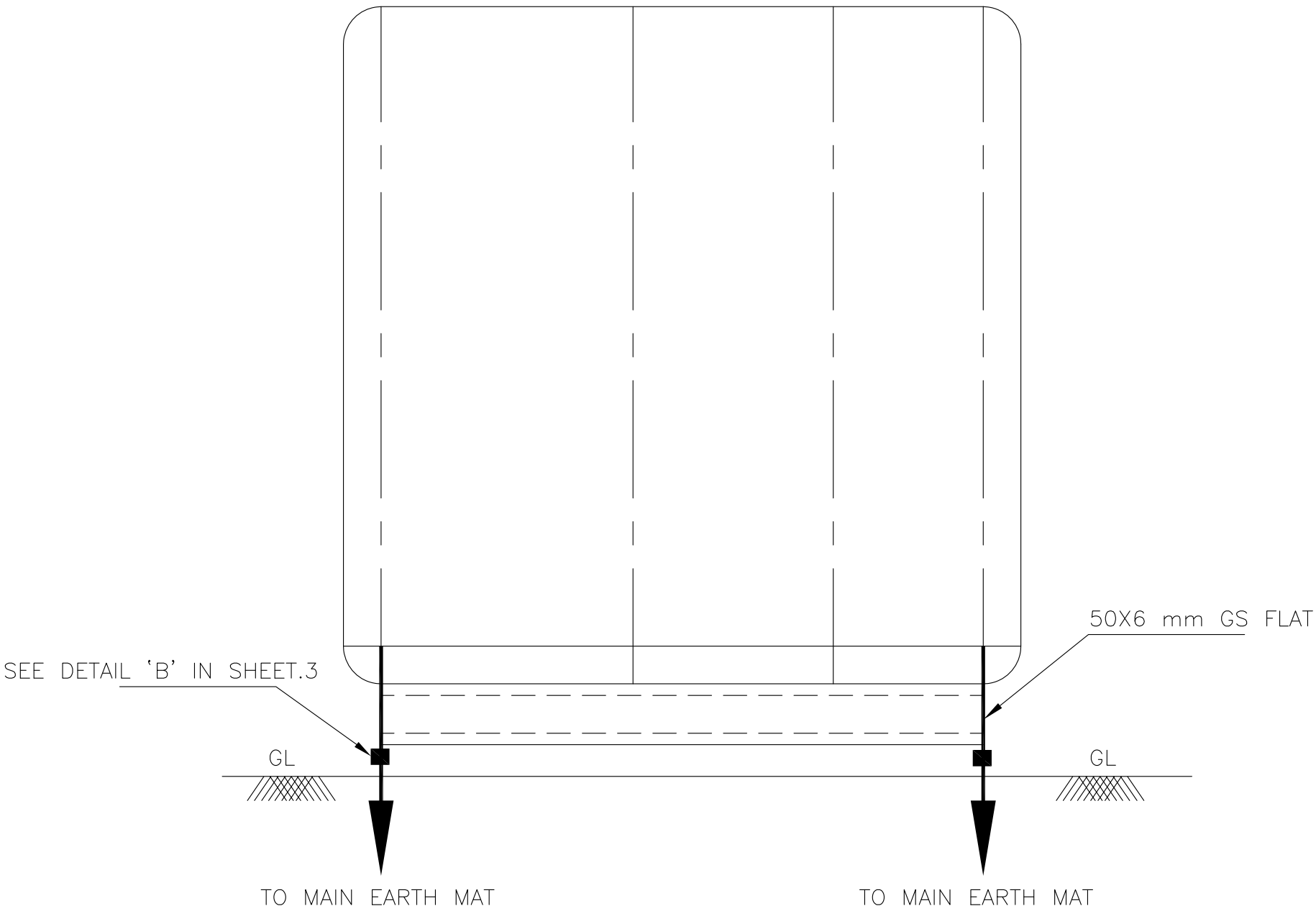

EQUIPMENT	FLAT SIZE
SWITCHGEAR/PMCC	50X6 mm
AC / DC DISTRIBUTION BOARDS	50X6 mm
RELAY PANELS	50X6 mm
MARSHALING KIOSK	50X6 mm
R2 BATTERY CHARGER	50X6 mm
LIGHTING PANEL	50X6 mm

बीएचईएल BHEL

EQUIPMENT & STRUCTURE EARTHING DETAILS

SWITCHGEAR / PMCC / RELAY PANEL

DRG. No. TB-DG-445-316-E012 REV. 02

SHEET No. 15

FENCE GROUNDING

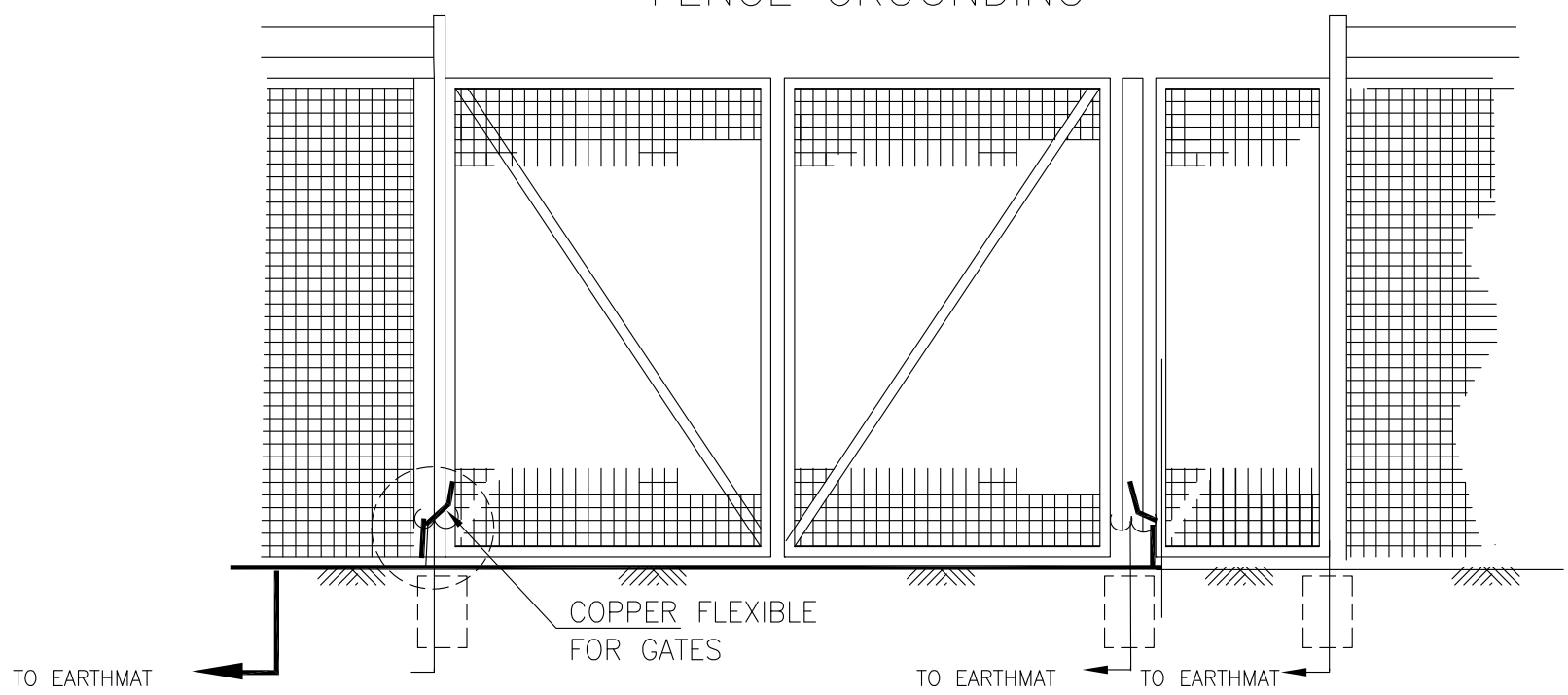

FENCE POSTS SHALL BE EARTHED BY 50X6 MM GS FLAT AT AN INTERVAL OF 10MTR.

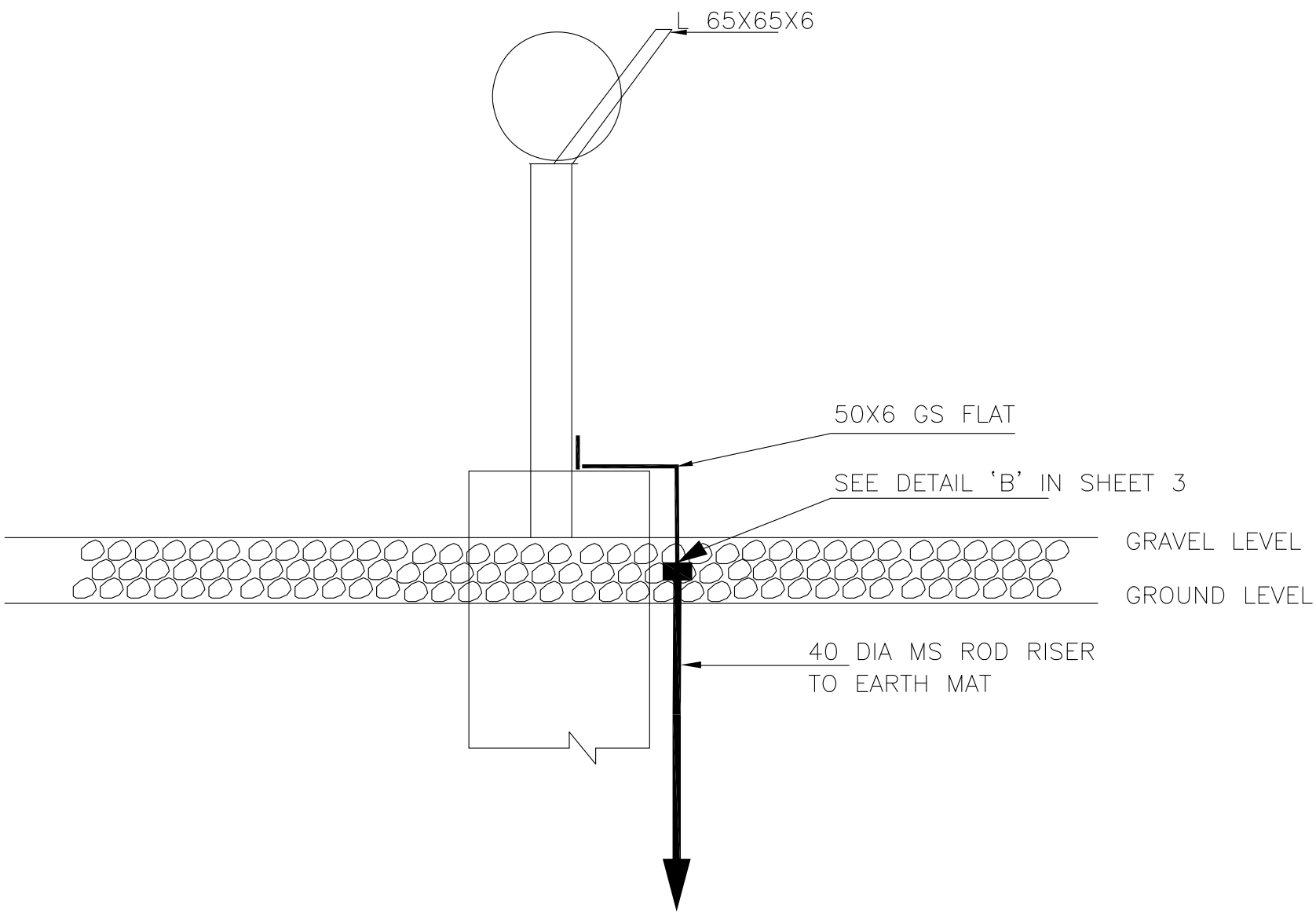

FENCE EARTHING

बीएचईएल BHEL	EQUIPMENT & STRUCTURE EARTHING DETAILS FENCE POST		
	DRG. No. TB-DG-445-316-E012	REV. 02	SHEET No. 16

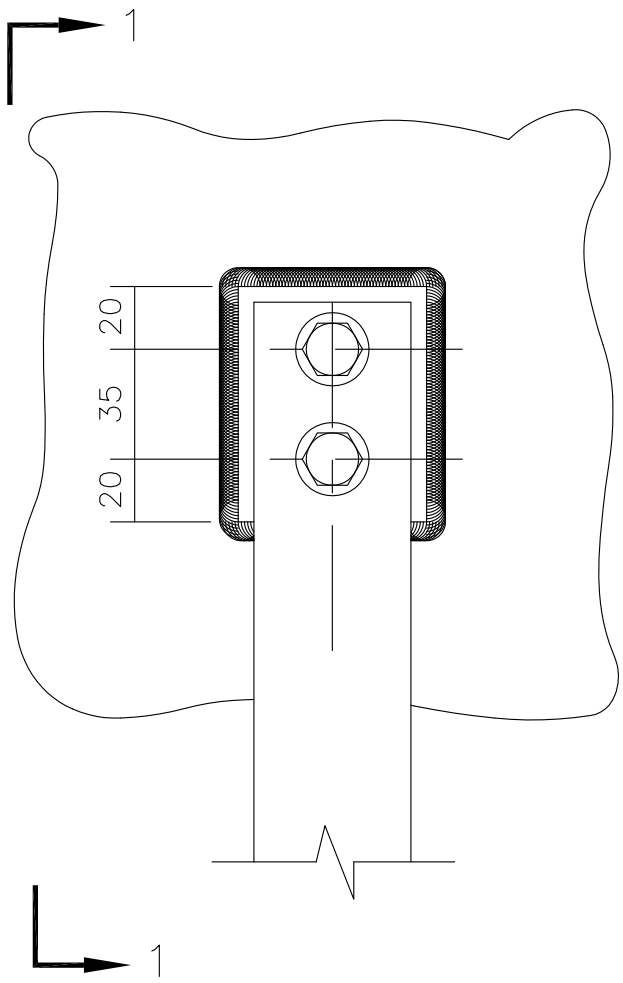

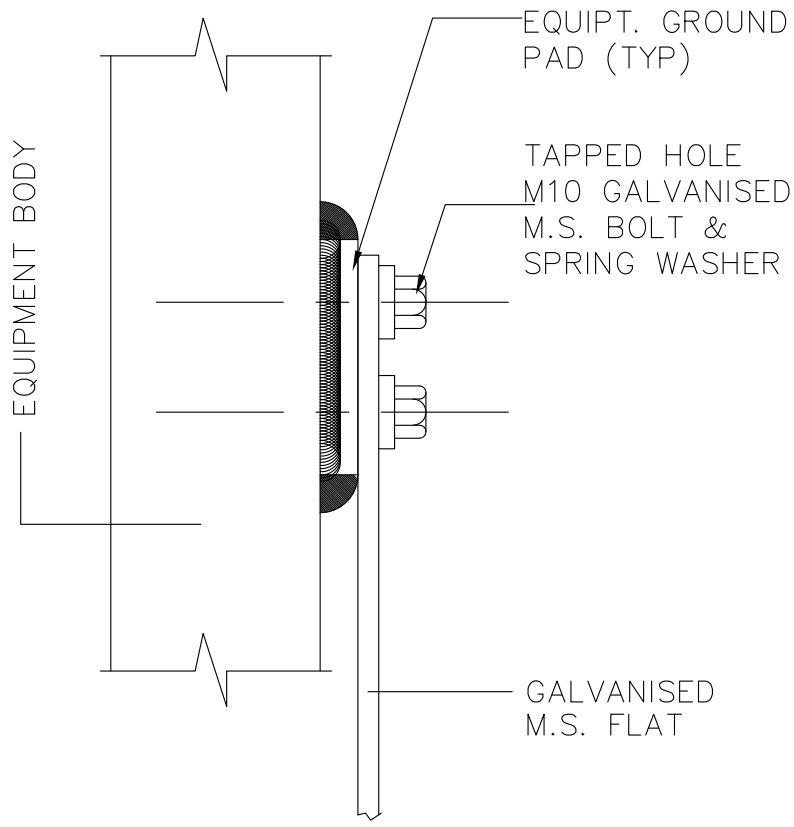

SECTION – 1 – 1

EQUIPMENT GROUNDING

NOTE

1. THIS IS GENERAL TYPICAL BOLTING ARRANGEMENT APPLICABLE TO ALL PANELS, EQUIPMENT,ETC,WHERE BOLTING ARRANGEMENT IS PROVIDED.
2. IN CASE EARTHING TERMINAL COMPRISES ONLY A TAPPED HOLE SUITABLE BOLT/ SCREW WITH WASHER MAY BE USED FOR EARTHING CONDUCTOR TERMINATION

बीएचईएल BHEL	EQUIPMENT & STRUCTURE EARTHING DETAILS TYPICAL ARRANGEMENT OF BOLTED JOINTS		
	DRG. No. TB-DG-445-316-E012	REV. 02	SHEET No. 17

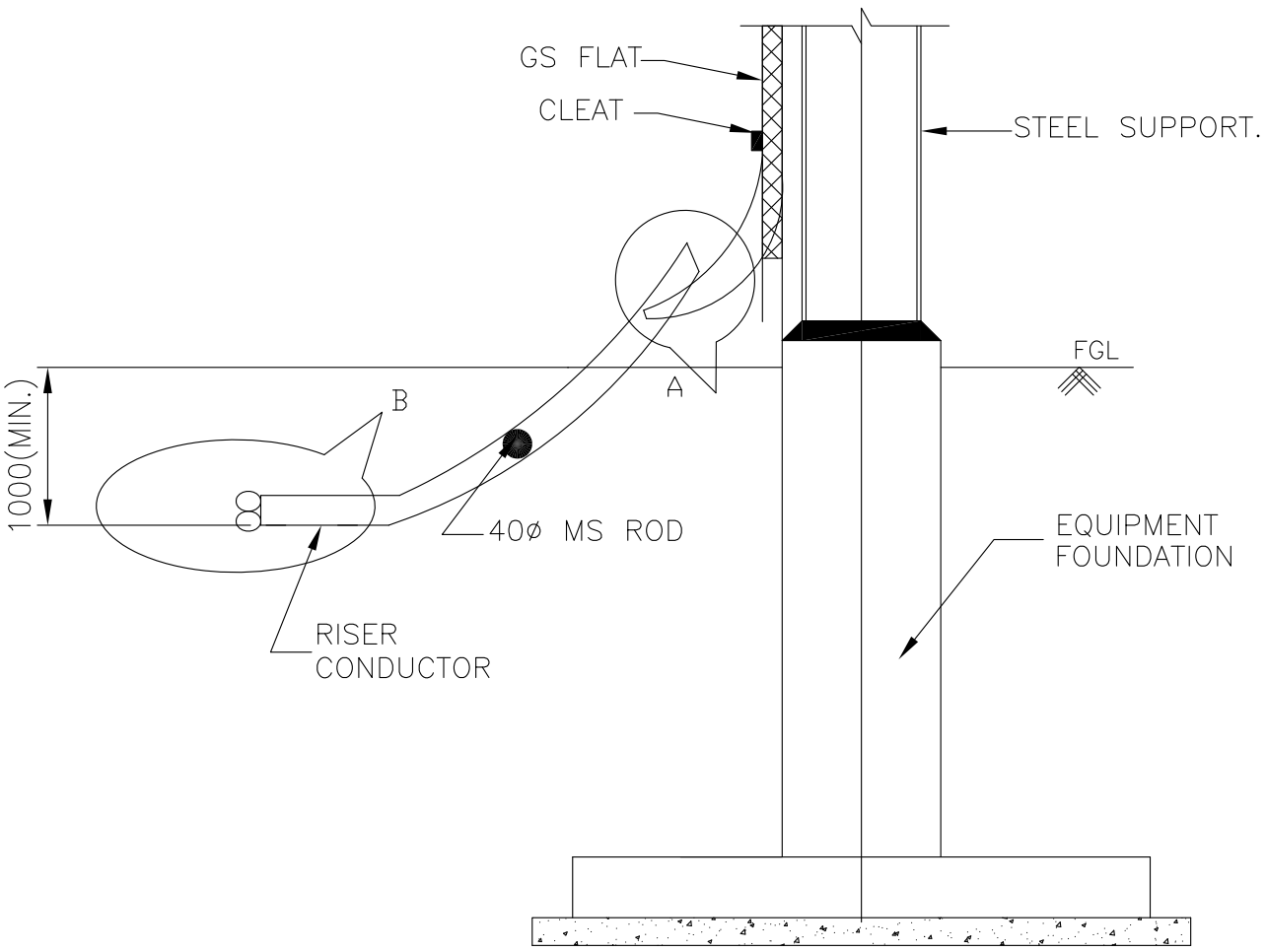

TYPICAL DETAILS OF RISER

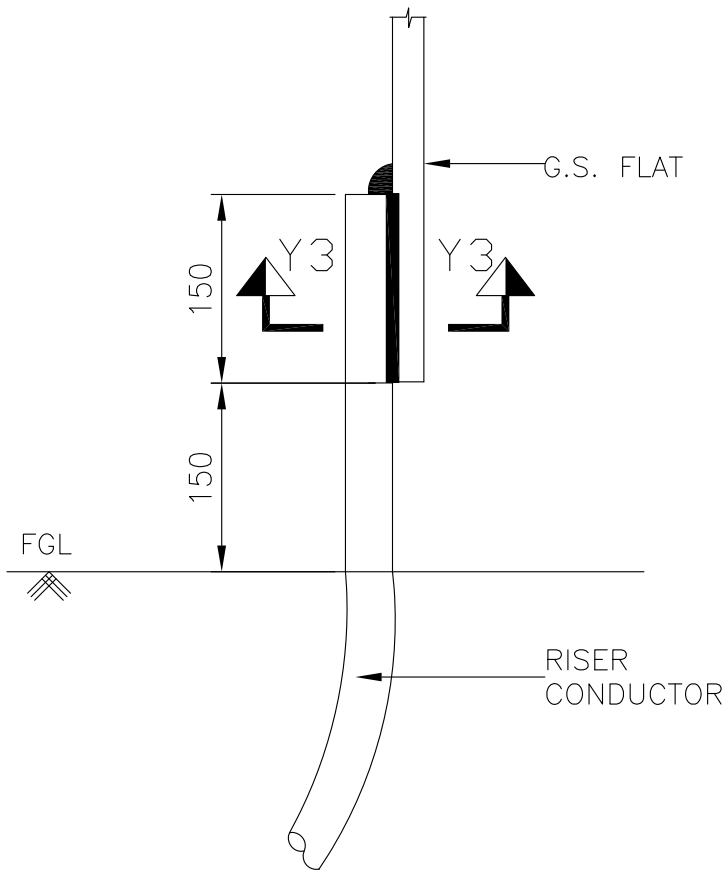

ELEVATION
DETAIL-A

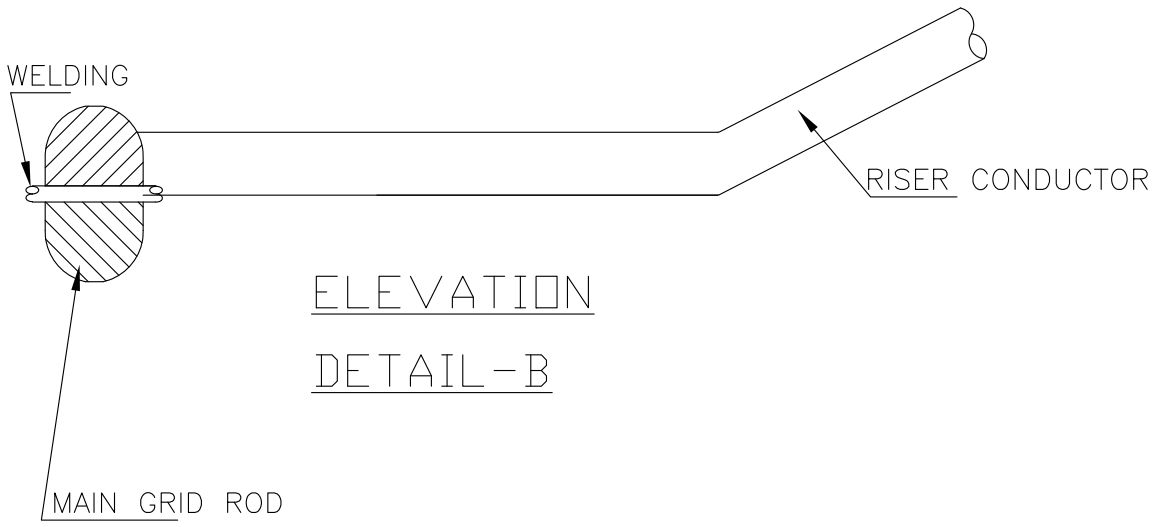

ELEVATION
DETAIL-B

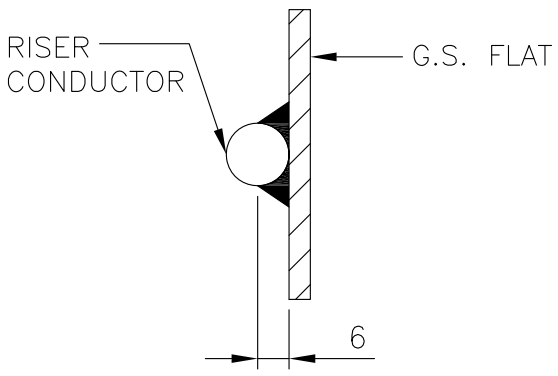

SECTION Y3-Y3

बीएचईएल BHEL	EQUIPMENT & STRUCTURE EARTHING DETAILS WELDING DETAILS		
COMPUTERREF.NO.	DRG. No. TB-DG-445-316-E012	REV. 02	SHEET No. 18

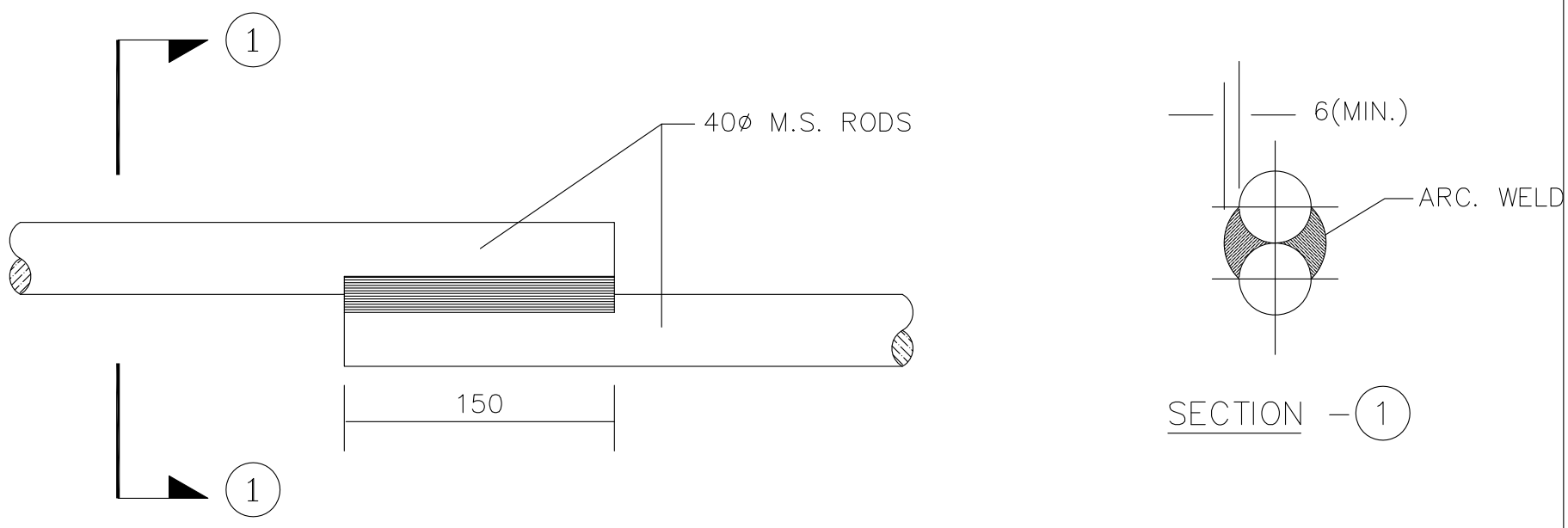

LAP JOINT
BETWEEN M.S. RODS

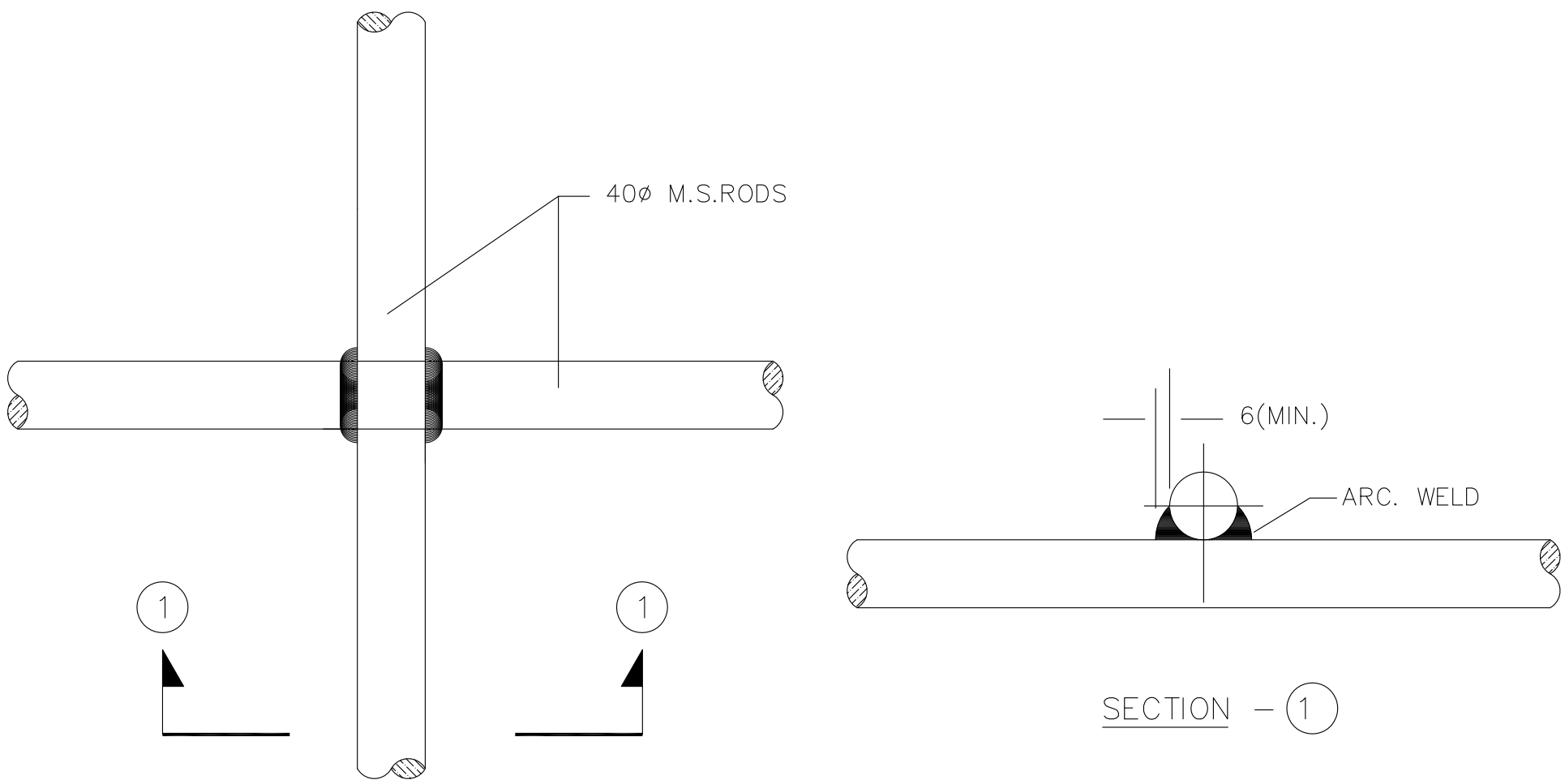

CROSS JOINT
BETWEEN M.S. RODS

बीएचईएल BHEL	EQUIPMENT & STRUCTURE EARTHING DETAILS WELDING DETAILS		
COMPUTERREF.NO.	DRG. No. TB–DG–445–316–E012	REV. 02	SHEET No. 19

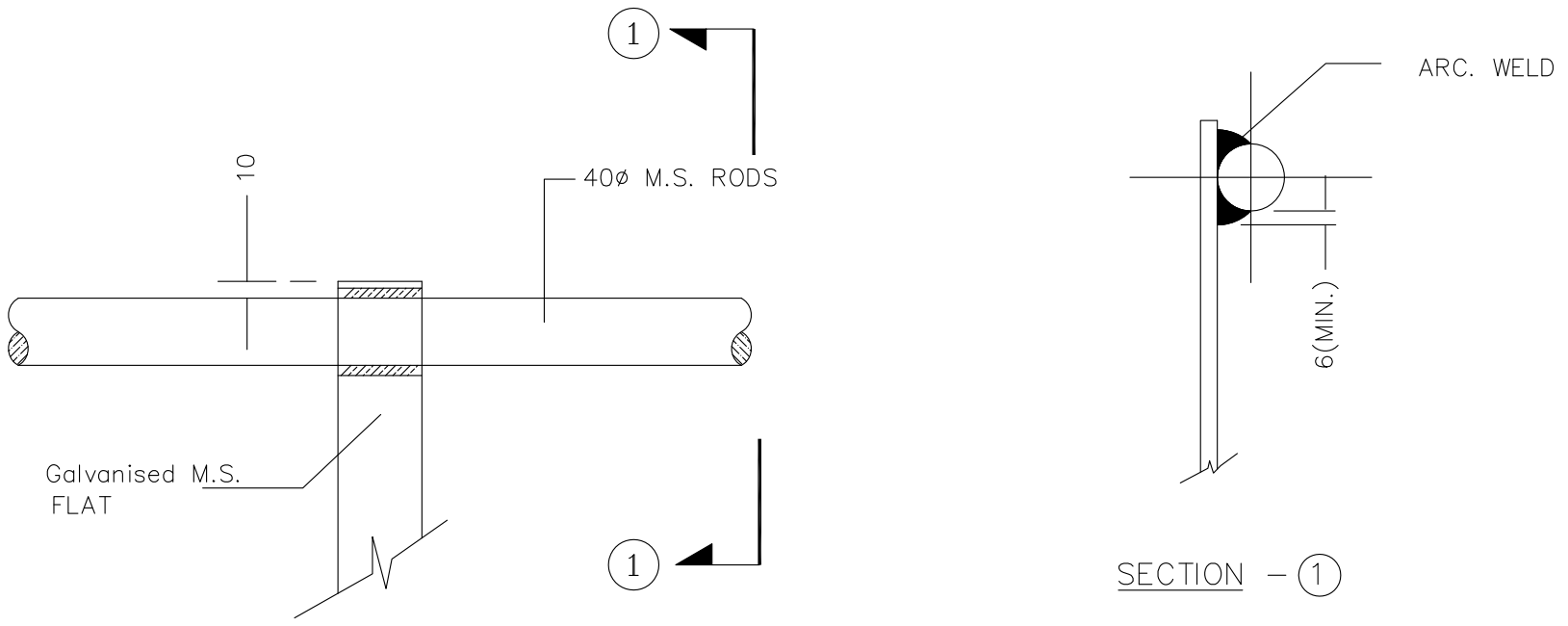

CROSS JOINT
BETWEEN M.S. ROD & GALVANISED M.S. FLATS

STRIP TO STRIP STRAIGHT LAP JOINT

बीएचईएल BHEL	EQUIPMENT & STRUCTURE EARTHING DETAILS WELDING DETAILS		
COMPUTERREF.NO.	DRG. No. TB–DG–445–316–E012	REV. 02	SHEET No. 20

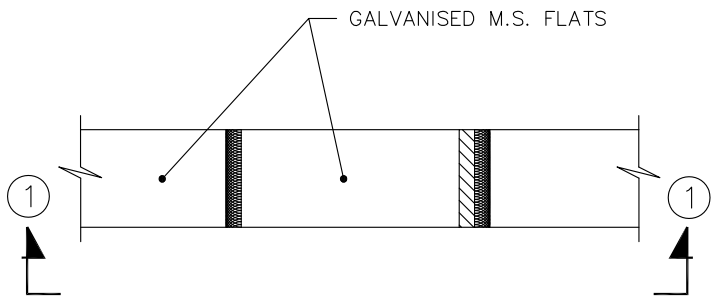

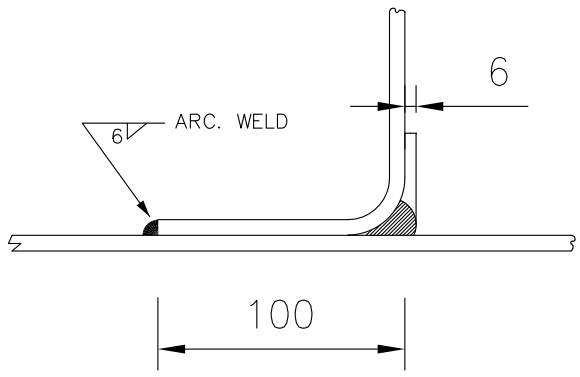

SECTION – 1

ANGULAR JOINT
BETWEEN GALVANISED M.S. FLATS

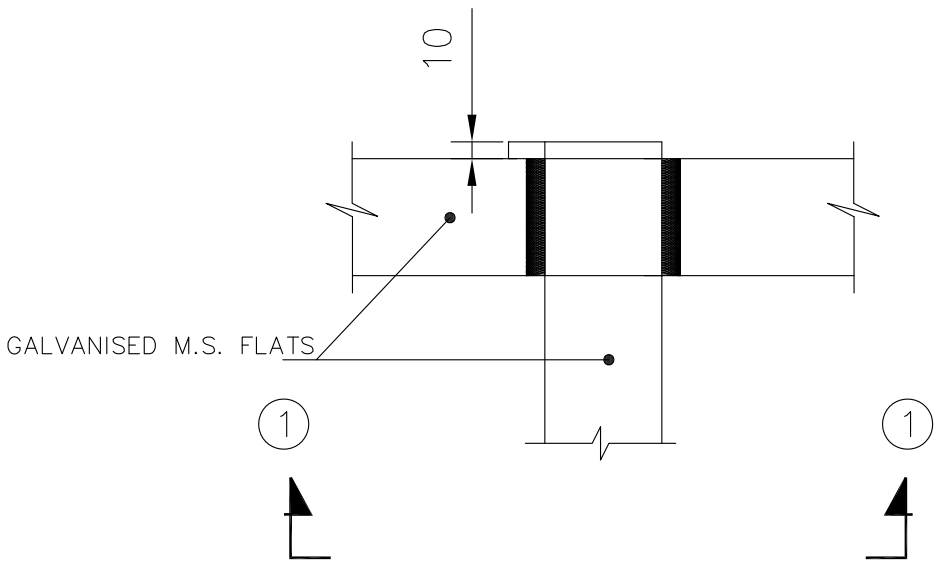

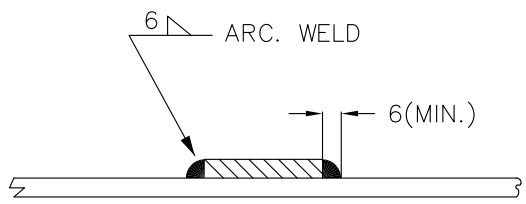

SECTION – 1

CROSS JOINT
BETWEEN GALVANISED M.S. FLATS

बीएचईएल
BHEL

EQUIPMENT & STRUCTURE EARTHING DETAILS

WELDING DETAILS

COMPUTERREF.NO.	DRG. No. TB–DG–445–316–E012	REV. 02	SHEET No. 21

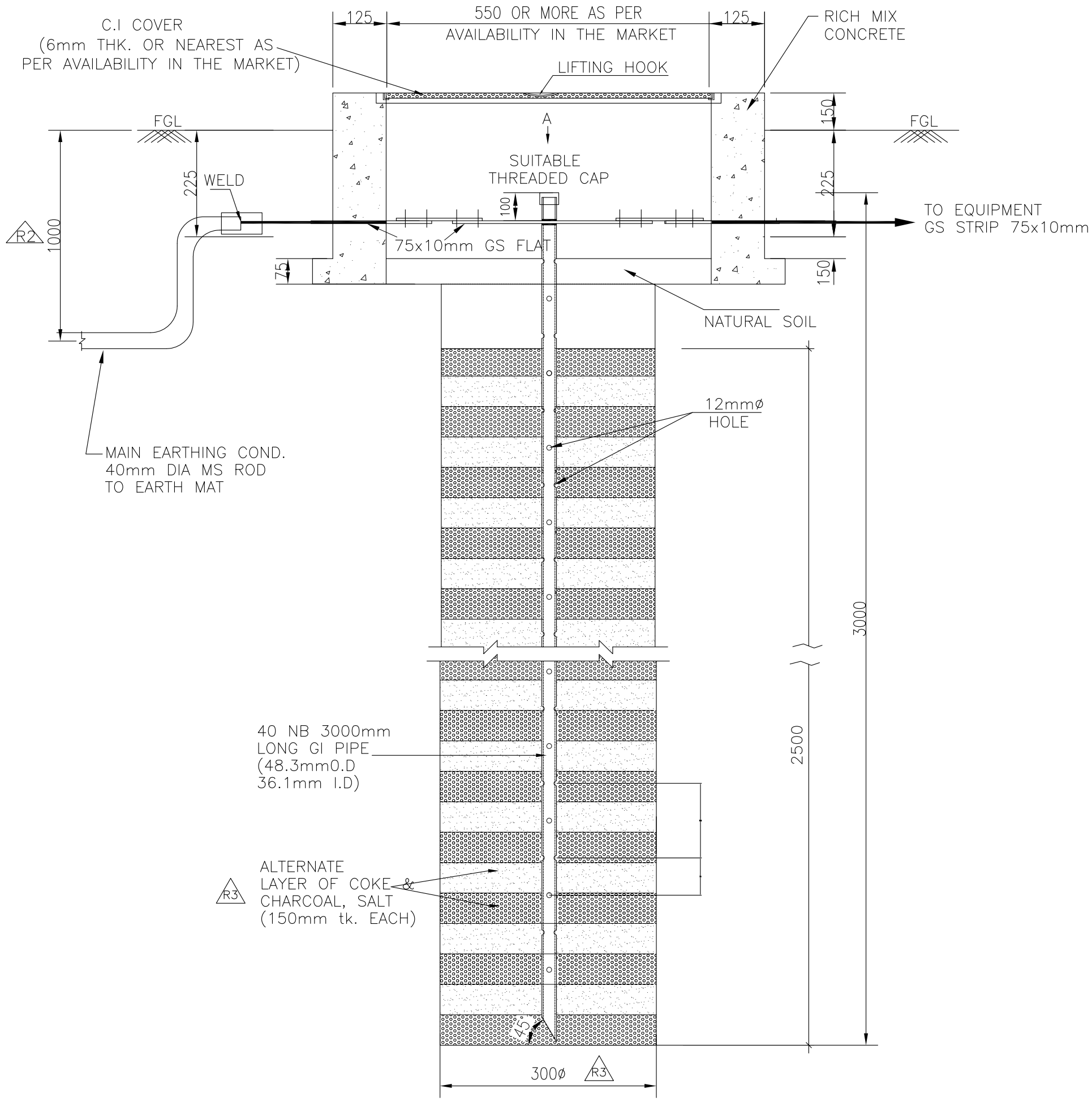

VIEW–A

NOTE:

1. ALL NUTS,BOLTS AND WASHERS SHALL BE GALVANISED AS PER SPECIFICATION.

बीएचईएल BHEL	EQUIPMENT EARTHING DETAILS PIPE EARTH ELECTRODE WITH TREATED PIT	
COMPU. DRG. REF.	DRG. No. TB–DG–445–316–E012 Rev02	SHEET No. 22

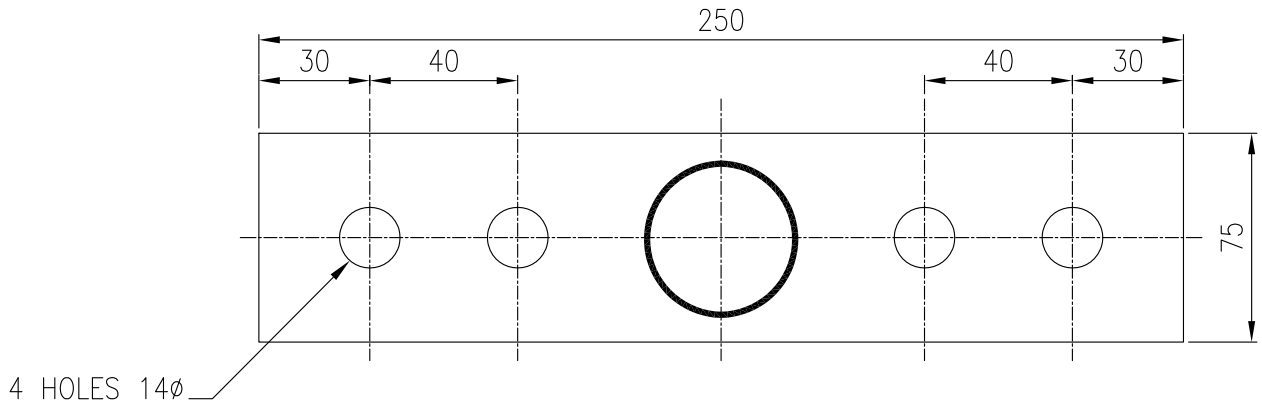

DETAIL–X

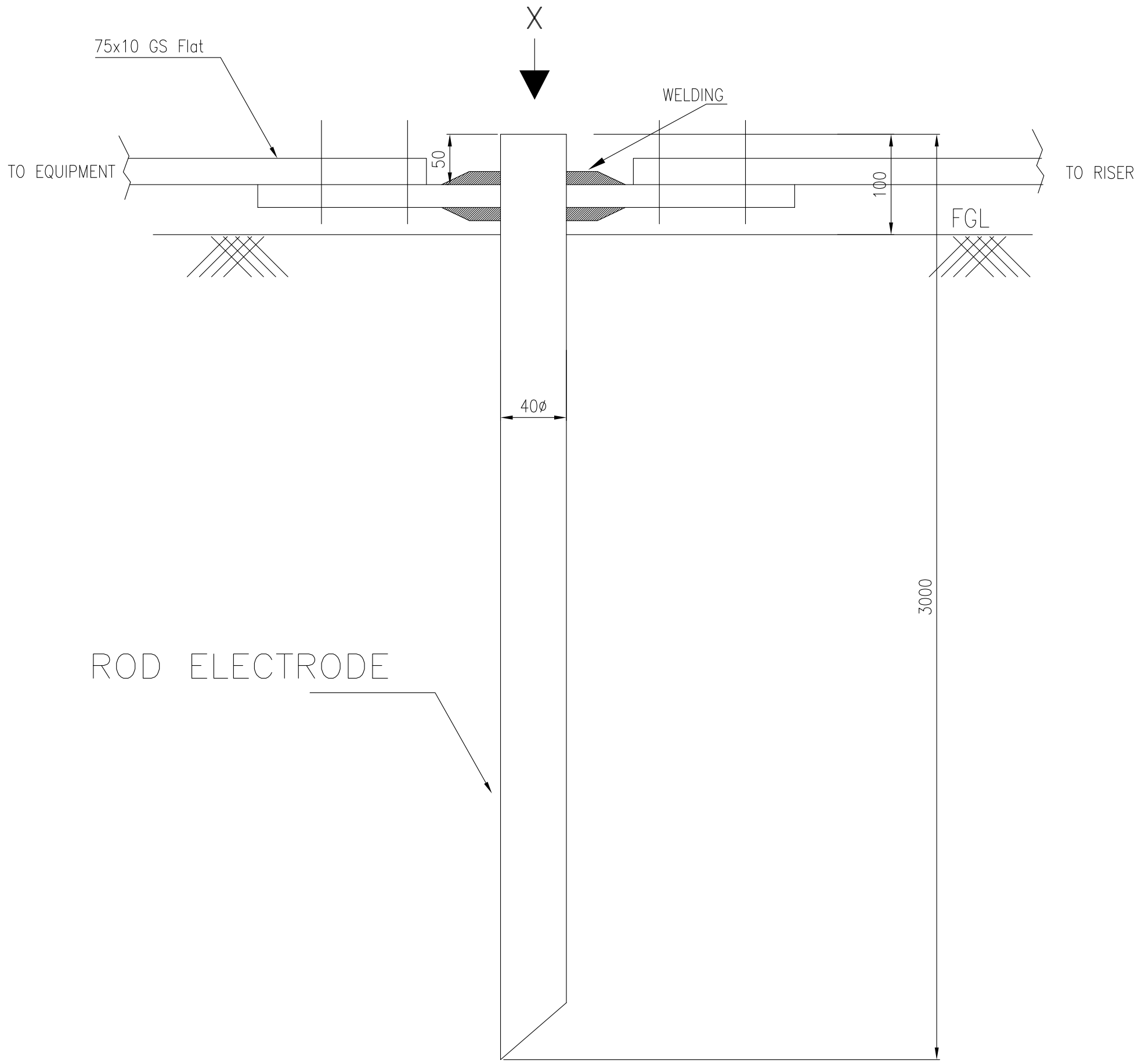

बीएचईएल BHEL	EQUIPMENT EARTHING DETAILS 40mm ROD ELECTRODE WITHOUT PIT		
COMPU. DRG. REF.	DRG.NO. TB–DG–445–316–E012	REV02	SHEET No. 23

FIRST ANGLE PROJECTION (ALL DIMENSIONS ARE IN MM.)

DRAWING No. TB-DG-445-316-E013

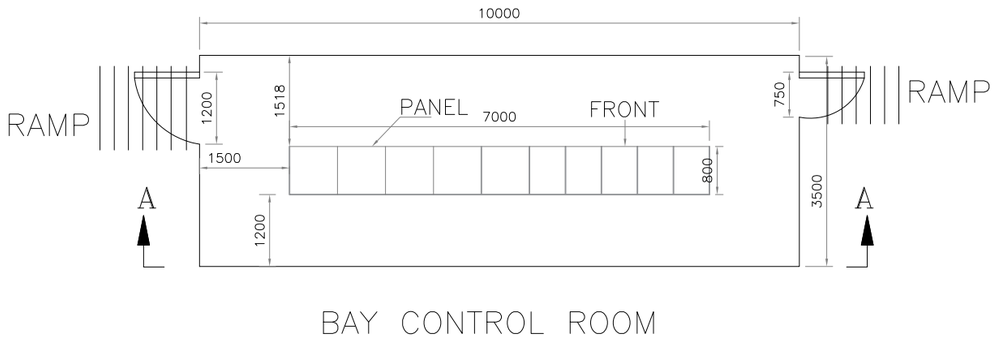

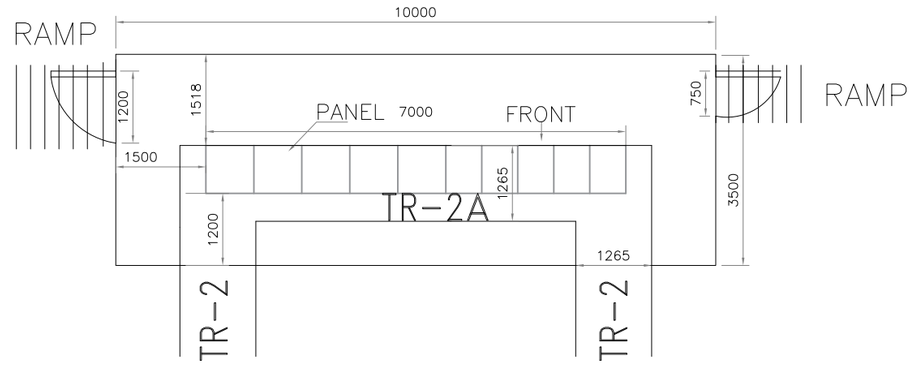

Forward final drawing with final dimension for approval

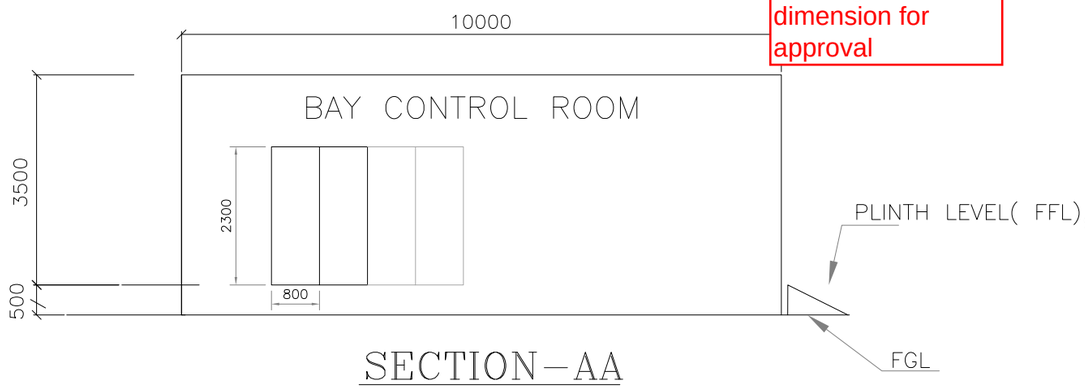

SECTION–AA

NOTES:–

1. ALL DIMENSION ARE IN mm.
2. THE DIMENSION AND ARRANGEMENT OF PANELS INSIDE BAY CONTROL ROOM BUILDING ARE INDICATIVE AND SAME SHALL BE FINALISED DURING DETAILED ENGINEERING AFTER ORDERING OF PANELS.
3. BAY CONTROL ROOM SHALL BE PROVIDED WITH ALUMINIUM GLAZED WINDOW.
4. ALL THE DIMENSIONS OF THE ROOMS ARE INNER DIMENSIONS.
5. SEPARATE DRAWING SHALL BE SUBMITED FOR DETAILED ARCHITECTURE OF BAY CONTROL ROOM BUILDING AND TRENCH LAYOUT.
6. MAIN DOOR(1200X2500) OF BAY CONTROL ROOM WILL BE ON THE SIDE OF ROAD. EMERGENCY EXIT DOOR(750X2100) OF BAY CONTROL ROOM WILL BE ON THE OPPOSITE SIDE OF ROAD.
7. AIR CONDITIONING IN BAY CONTROL ROOM SHALL BE PROVIDED WITH 2x100% SPLIT AC OF ADEQUATE CAPACITY.
8. FIRE DETECTION IN BAY CONTROL ROOM SHALL BE PROVIDED WITH SMOKE DETECTOR WHICH WILL BE HOOKED TO FIRE ALARM PANEL LOCATED IN EXISTING CONTROL ROOM.
9. SEPARATE CONDUIT WILL BE PROVIDED FOR EACH FIBER OPTIC CABLE AND WILL BE CLAMPED SUITABLY.

REFERENCE DWG. :–

LAYOUT PLAN 400kV SAGARDIGHI SUBSTATION
DWG. NO. TB–DG–445–316–E002

REV.	DATE	ALTERED / CHECKED / APPROVED	ZONE
2	18.08.21	NKT / MVK / SKS	Document amended based on customer comment on Rev01
1	09.07.21	NKT / MVK / SKS	Document amended based on customer comment on Rev00

ADDITIONAL INFORMATION
W.O.No.
STATUS OF DRAWING
DISTRIBUTION OF PRINTS

ग्राहक/परियोजना का नाम THE WEST BENGAL POWER DEVELOPMENT CORPN. LTD.
NAME OF CUSTOMER/PROJECT
(1 x 660 MW) SAGARDIGHI THERMAL POWER EXTENTION PROJECT (UNIT 5)

NAME OF CONSULTANT
DEVELOPMENT CONSULTANTS PRIVATE LIMITED KOLKATA

भारत हेवी इलेक्ट्रिकल्स लिमिटेड
पारेषण परियोजना विभाग
BHARAT HEAVY ELECTRICALS LTD.
TRANSMISSION PROJECTS DIVISION

	नाम /NAME	हस्ता./SIGN.	दि./DATE
तैयार DRAWN	NKT	–SD–	19.04.21
जाँचा CHECKED	MVK	–SD–	
स्वीकृत APPROVED	SKS	–SD–	

विभाग DEPT.
कोड CODE
अनुपात / SCALE 1:110
कार्ड कोड CARD CODE

शीर्षक/TITLE
Electrical Equipment and cabling layout of BCR at Sagardighi Unit-5

ड्रॉईंग क्र./DRAWING NO. TB-DG-445-316-E013
पुनः/REV. 02
पृष्ठ क्र./SHEET No. 01 अगला पृष्ठ/NEXT SHEET 02

COPY RIGHT AND CONFIDENTIAL
The information on this document is the property of BHARAT HEAVY ELECTRICALS LIMITED
It must not be used directly or indirectly in anyway detrimental to the interest of the company.

COMPUTER DWG. PATH NAME :
SIGN. & DATE
REF. DRG. No.
INVENTORY No.

FIRST ANGLE PROJECTION (ALL DIMENSIONS ARE IN MM.)

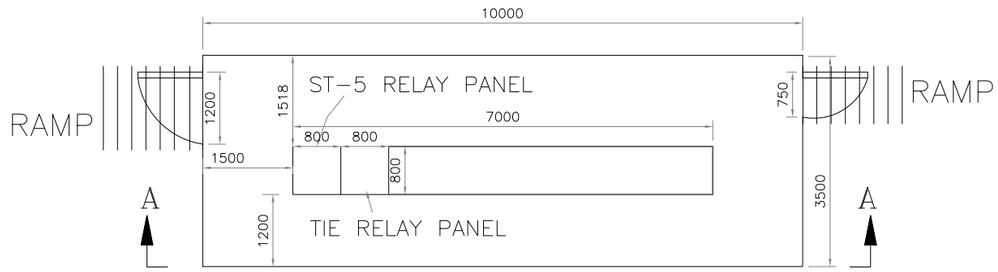

BAY CONTROL ROOM-1
(Dia425-426-427)

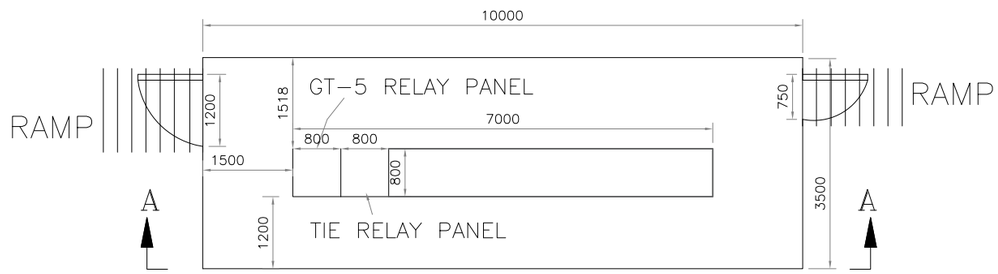

BAY CONTROL ROOM-2
(Dia431-432-433)

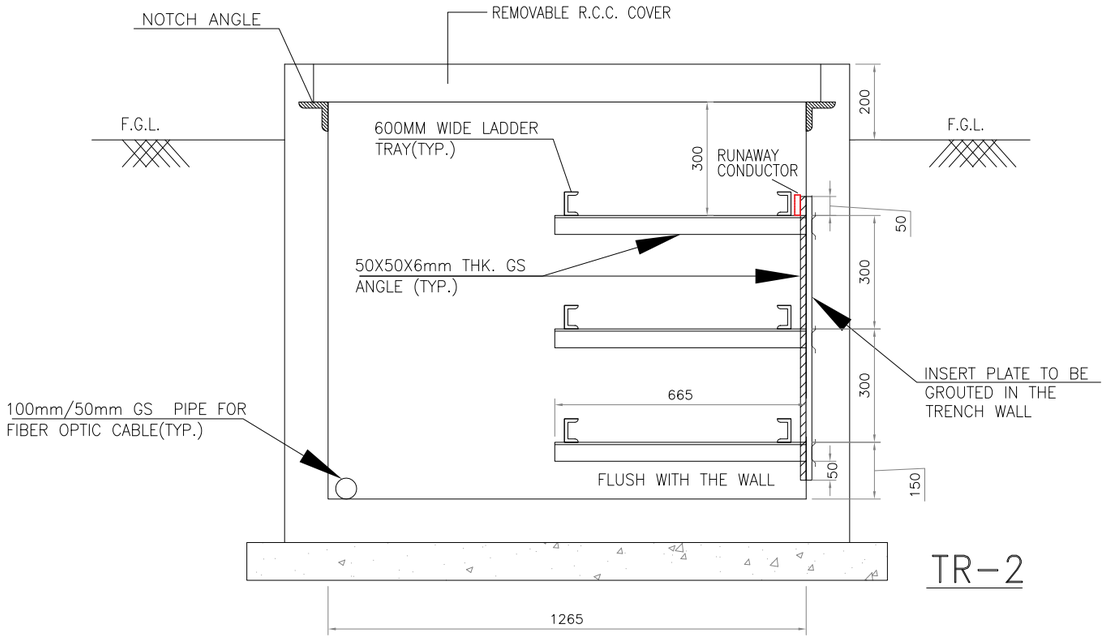

TR-2

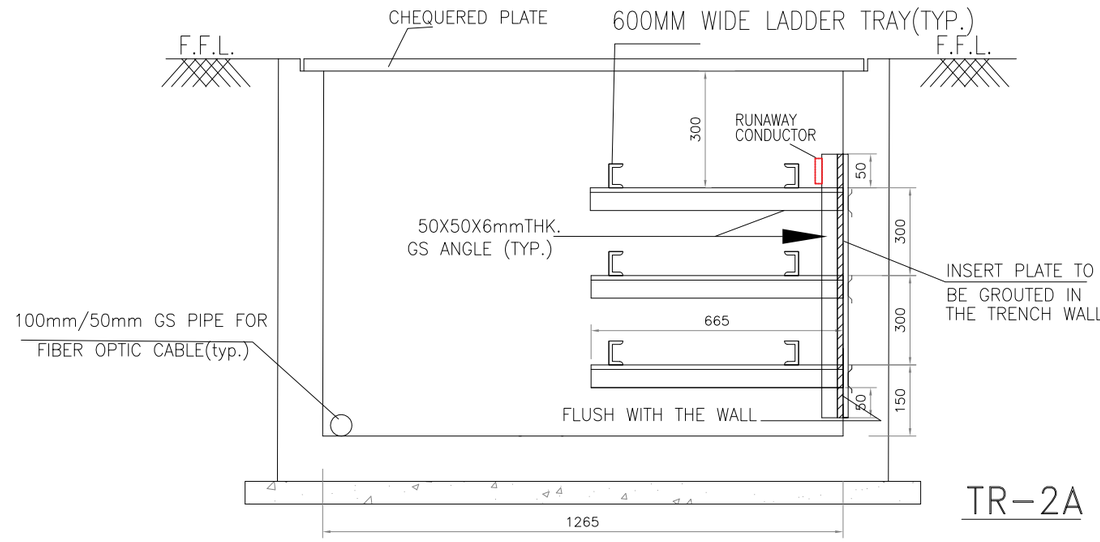

TR-2A

PANEL DETAILS-

S No.	Description	Dimension in mm (LXBXH)
1.	ST-5 Relay panel STRP-Bay 425	800X800X2300
2.	Tie Relay panel TRP- Bay 426	800X800X2300
3.	GT-5 Relay panel GTRP-Bay 431	800X800X2300
4.	Tie Relay panel TRP- Bay 432	800X800X2200

Where control/network panels for SAS interfacing for aux. power distribution sytem control and monitoring shall be located? Please clarify.

योजना का नाम THE WEST BENGAL POWER DEVELOPMENT CORPN. LTD.
CUSTOMER/PROJECT
(1 x 660 MW) SAGARDIGHI THERMAL POWER EXTENTION PROJECT (UNIT 5)

STATUS OF DRAWING
DISTRIBUTION OF PRINTS

NAME OF CONSULTANT
DEVELOPMENT CONSULTANTS PRIVATE LIMITED KOLKATA

भारत हेवी इलेक्ट्रिकल्स लिमिटेड
ट्रांसमिशन परियोजना विभाग
BHARAT HEAVY ELECTRICALS LTD.
TRANSMISSION PROJECTS DIVISION

	नाम /NAME	हस्ता./SIGN.	दि./DATE
बनाया DRAWN	NKT	-SD-	19.04.21
जाँच CHECKED	MVK	-SD-	
स्वीकृत APPROVED	SKS	-SD-	

REV.	DATE	ALTERED	CHECKED	APPROVED	ZONE
2	16.08.21	NKT	MVK	SKS	Document amended based on customer comment on Rev01
1	09.07.21	NKT	MVK	SKS	Document amended based on customer comment on Rev00

विभाग DEPT.
कोड CODE
अनुपात / SCALE 1:110
कार्ड कोड CARD CODE

शीर्षक/TITLE
Electrical Equipment and cabling layout of BCR at Sagardighi Unit-5

ड्राईंग.क./DRAWING NO. TB-DG-445-316-E013
पुनः/REV. 02
पृष्ठ क./SHEET No. 02 अगला पृष्ठ/NEXT SHEET -

COPY RIGHT AND CONFIDENTIAL
The information on this document is the property of BHARAT HEAVY ELECTRICALS LIMITED
It must not be used directly or indirectly in any way detrimental to the interest of the company.

DRAWING No. TB-DG-445-316-E013

Project: Sagardighi S/s

Package-Fire Fighting System

ANNEXURE-2

BILL OF QUANTITY - THE BILL OF QUANTITY / UNIT WEIGHT MENTIONED HEREAFTER IS TENTATIVE AND MAY VARY DURING DETAILED ENGINEERING STAGE. MODE OF PAYMENT SHALL BE EQUIPMENT / ITEM WEIGHT EXCLUDING PACKING WEIGHT, BIDDER TO QUOTE ACCORDINGLY.

Sl. No.	Description	Unit	Qty. (Nos)	Unit weight (Kg)	Total weight (Kg)	Grand Total (Kg)
1	Single headed external hydrant valve SS construction (IS:5290, Type-A) 63NB	Nos	10	35	350	8941.5
2	RRL fire hose 63 mm dia x 15 mtrs long with SS coupling (IS: 636 (Type-A))	Nos	20	20	400	
3	Branch pipe with nozzle (SS-304) as per IS:2871	Nos	10	15	150	
4	MS fabricated glass fronted external hose cabinet	Nos	10	40	400	
5	Above ground MS pipe (as per IS:1239 part-1, med. gr.) - 150NB	Mtrs	300	15	4500	
6	Above ground MS pipe (as per IS:1239 part-1, med. gr.) - 100NB	Mtrs	195	13.5	2632.5	
7	Above ground MS pipe (as per IS:1239 part-1, med. gr.) - 80NB	Mtrs	20	12	240	
8	CI gate valve - 150NB	Nos	1	50	50	
9	CI gate valve - 100NB	Nos	1	50	50	
10	Addressable Multisensor Smoke Detector	Nos	15	0.25	3.75	
11	Addressable Manual Call Point	No	5	0.25	1.25	
12	Hooter	No	2	0.25	0.5	
13	Fire Alarm Panel	No	1	50	50	
14	Isolator Module	No	2	0.25	0.5	
15	Control Module (Relay Mode)	Nos	8	0.25	2	
16	Control Module (NAC Mode)	No	4	0.25	1	
17	Twisted pair Armoured Screened FRLS cable	Lot	1	50	50	
18	Carbon Dioxide type Portable Extinguisher (4.5 kg Capacity)	Nos	4	10	40	
19	Dry Chemical Powder type Portable Extinguisher (6.0 kg Capacity)	Nos	1	20	20	

Project: Sagardighi S/s ANNEXURE-3
Package-Air Conditioning and Ventilation System

BILL OF QUANTITY - THE BILL OF QUANTITY / UNIT WEIGHT MENTIONED HEREAFTER IS TENTATIVE AND MAY VARY DURING DETAILED ENGINEERING STAGE. MODE OF PAYMENT SHALL BE EQUIPMENT / ITEM WEIGHT EXCLUDING PACKING WEIGHT, BIDDER TO QUOTE ACCORDINGLY.

Sl. No.	Description	Unit	Qty. (Nos)	Unit weight (Kg)	Total weight (Kg)	Grand Total (Kg)
1	Split AC Units (complete package of indoor and outdoor units, drain pipes and stabiliser)	Nos	10	50	500	935
2	Copper refrigerant pipes	Meters	100	2	200	
3	MS bracket for installation	Nos	10	2.5	25	
4	MCB with mounting Box	Nos	10	1	10	
5	Ventilation Fans	Nos	10	20	200	

Annexure – 4

List of Documents (400kV Switchyard at Sagardighi unit5 project) -

Sl No	Doc No.	Description	Pages
1	Volume : II-F/2 Section : VII	Technical Specification for Erection - Cabling, Grounding and Lightning Protection System	36
2	Volume : II-F/2 Section : VIII	Technical Specification for Erection - Indoor and Outdoor Electrical Equipment	16
3	12A05-DWG-E-0400,	Notes & Details - Cabling	29
4	12A05-DWG-E-0600,	Notes & Details - Grounding System	27
5	12A05-DWG-E-1000,	Notes & Details - Lightning Protection	13

VOLUME : II-F/2

SECTION-VII

TECHNICAL SPECIFICATION

ERECTION - CABLING, GROUNDING AND LIGHTNING PROTECTION SYSTEM

CONTENT

CLAUSE NO.	DESCRIPTION	PAGE NO.
1.00.00	SCOPE OF WORK	1
2.00.00	SCOPE OF SUPPLY & SERVICES	1
3.00.00	GENERAL REQUIREMENTS	3
4.00.00	DESIGN CRITERIA	3
5.00.00	SPECIFIC REQUIREMENTS – SUPPLY	11
6.00.00	METHODS AND WORKMANSHIP	15
7.00.00	INSTALLATION	16
8.00.00	TESTS	24
9.00.00	DRAWINGS, DATA & MANUALS	25
	ATTACHMENTS	
ANNEXURE-A	DETAILS FOR FIRE-PROOF CABLE PENETRATION SEALING SYSTEM	26

SECTION - VII

ERECTION - CABLING, GROUNDING AND LIGHTNING PROTECTION SYSTEM

1.00.00 SCOPE OF WORK

1.01.00 The scope of work covers complete and efficient design, supply, erection, testing and commissioning of cabling, electrical grounding and lightning protection system for the entire plant.

1.01.01 Area-wise, the scope shall broadly cover, but not be limited to :

A. Main Power House Building
B. Boiler area, ESP stack
C. Transformer yard, CHP, AHP, FGD area.
D. All auxiliary areas/ buildings (including electrical rooms of respective buildings) and structures of balance of plant (BOP) systems as details in the Lead Specification.
E. Overhead interplant cable trestle and pipe cum cable trestle.

1.01.02 Equipment-wise, the scope of work related to cabling, electrical grounding and lightning protection shall cover all electrical equipment as described in different Sections of the Specification.

1.02.00 Scope of work shall also include all civil and structural works (except cable trenches/tunnels and major equipment foundations) necessary for installation of cabling, electrical grounding and lightning protection system.

2.00.00 SCOPE OF SUPPLY & SERVICES

2.01.00 Scope of Supply

Scope of supply shall include but not be limited to the followings

2.01.01 Transportation to site in properly packed condition of all materials and miscellaneous items required to complete the erection work under this specification.

2.01.02 These materials and miscellaneous items shall include but not be limited to the following:

a) Galvanized steel rigid/flexible conduits and accessories, ferrules, lugs, glands, terminal blocks, galvanized sheet steel junction boxes, cable fixing clamps, nuts & bolts, etc. as required.

b) Cable trays, Fittings and Accessories

c) Cable termination and jointing kits as necessary.

d) All necessary erection materials, consumables and sundry items including arc welding rods to complete the installation for satisfactory and trouble free operation.

e) Mild steel rods for main ground mat, grounding electrode, column & structure grounding, risers etc.

Mild steel rod for vertical air terminals,

Materials for electronic grounding,

Galvanized steel flats for horizontal air terminals, for down conductors and for large equipment grounding

Galvanized wire (8 SWG) for small equipment grounding.

f) Fire-proof cable penetration sealing system,

g) Fire retardant cable coating system.

h) Any item of works or erection materials which have not been specifically mentioned but are necessary to complete the work of Cabling, Grounding and Lightning Protection Systems shall be deemed to be included in the scope of this specification and shall be furnished by the Contractor without any extra charge to the Purchaser.

2.02.00 Scope of Services

The scope of Cabling, Grounding and Lightning Protection Systems includes but is not limited to the following:

2.02.01 Furnishing of all erection tools and tackles, testing equipment, implements, supplies, hardware and transport for timely and efficient execution of the erection work.

2.02.02 Erection work shall be performed with respect to all the equipment/materials mentioned under ‘Scope of Supply’.

2.02.03 Erection work shall also be performed with respect to the following items:

a) Cable trays and accessories

a) Power cables

b) Cables laid directly buried in ground

c) Control, instrument and special cables

3.00.00 GENERAL REQUIREMENTS

3.01.00 Codes and Standards

The electrical installation shall meet the requirements of Indian Electricity Rules as amended up to date and relevant IS Code of Practice. In addition, other rules and regulations applicable to the work shall be followed.

3.02.00 Erection Schedule

3.02.01 The Bidder shall agree to adhere to the Owner's Erection Schedule if such a schedule is attached with the Specification. Alternatively, in case the target completion dates alone are indicated, the Bidder shall furnish detailed erection schedules (starting from zero date) with separate 'S' curves for Cabling, Grounding and Lightning Protection works.

3.02.02 The erection schedule, as approved by the OE shall be strictly followed by the contractor. If the work is held-up for any reason, attributable to him or not, the same shall be brought immediately to the notice of the OE.

4.00.00 DESIGN CRITERIA

4.01.00 Grounding System

4.01.01 Grounding work shall be carried out in compliance to the following standards/codes. All standards, specifications and codes of practice (COP) referred to herein shall be the latest editions including all amendments and revisions as on the date of opening of bid. In case of conflict between the specification and those standards/codes referred to herein, the former shall prevail:

a)	Indian Electricity rules	
b)	National Electrical Code	
c)	Recommended practice for hot-dip galvanizing of iron and steel	IS 2629
d)	Method of testing uniformity of coating on zinc coated articles	IS 2633
e)	COP for earthing	IS 3043
f)	Methods for determination of mass of zinc coating on zinc coated iron and steel articles	IS 6745
g)	IEEE guide for safety in AC substation grounding	IEEE 80
h)	IEEE recommended practice for grounding of industrial and commercial power systems	IEEE 142
i)	IEEE recommended practice for determining the electric power station ground potential rise and induced voltage from a power fault	IEEE 367
j)	IEEE guide for instrumentation and control equipment grounding in generating stations	IEEE 1050

4.01.02 Basic design criteria are delineated below:

a) The station grounding system shall be an interconnected network of MS conductor and MS ground rods. The system shall (a) provide safety to personnel from contact of dangerous potential caused by ground fault, (b) ensure sufficient grounding current for effective relaying and (c) stabilize circuit potential with respect to ground.

b) The station grounding system shall be designed in compliance with the IEEE- 80/ IEEE- 665 considering fault current of 50kA for 1 sec. and shall be subject to approval of the Owner.

c) Actual soil resistivity measurement shall be carried out at proposed site during dry season.

d) The surface resistivity shall be considered as 3000 Ohm-meter for gravel and 1000 Ohm-meter for concrete.

e) Major items of equipment, such as generator, switchgear, transformer, motor, relay panels and control panels etc shall have integral ground buses or connection points which shall be connected to the underground grid.

f) Electronic panels and equipment, where required, shall be grounded utilizing an insulated ground wire connected in accordance with the manufacturer's recommendations. Where practical, electronics ground loops shall be avoided. Where this is not practical, isolation transformers shall be furnished. All indoor and outdoor electrical equipment and associated non-current carrying system, metal works, support structures, buildings columns, fence, neutrals, masts, arrestors, etc shall be connected to the plant ground system.

g) Instrumentation cable screens shall be single point bonded to the instrument earth network to minimize the effects of electrical interference.

h) For Signal/case/intrinsically safe signal, grounding of control room instruments, separate earth pit not connected to main ground grid shall be used. Control cabinets shall be connected to this separate earth pit.

i) A grounding conductor (steel wire armour in case of cables with outer sheath) shall be routed parallel to all power conductors operating above 240 volts.

j) All ground wires installed in conduits shall be uninsulated.

k) Embedded grounding grid made of GI flat at basement/grade slab as well as upper floor/suspended slabs shall be provided.

l) In addition mild steel ground pads at different locations i.e. on wall/floor/ceiling inside the buildings/tunnels/trenches shall be provided. These pads will be in turn connected to below ground level earth mat through galvanized steel flat or riser. Each ground pad shall have provision for connection of at least two GI flats.

m) Treated earth pit shall be provided for system earthing at locations where generator and transformer neutrals are grounded. Two pits shall be provided for each neutral.

n) Dedicated treated earth pit shall be provided for lightning protection system.

o) Clean earthing for instrumentation shall be provided with dedicated earthing system and separate treated earth pits below the main control room, feed water pump house in turbine house etc.

p) Connection between the equipment earth lead and the grid conductor shall be welded. For rust protection, the welds shall be treated with zinc chromate primer and coated with zinc rich paint.

In order to meet the above design criteria, ground grid mesh will be provided for the main plant complex, viz., switchyard, transformer yard adjacent to power house building, power house building and boiler area up to stack, auxiliary buildings, etc. All electrical equipment, non-current carrying metal parts, structures, building steel, lightning protection system, generator/transformer neutrals will be connected to this station ground grid.

4.01.03 Other major design aspects that are to be considered for grounding system are given below:

1. Ground Grid Conductor

   i) Ground grid conductor of mild steel rod shall be used.

   ii) The minimum conductor section is determined on the basis of ground fault current. This section is then increased by an allowance to account for the soil corrosion loss of 0.3 mm per year over the design life of 30 years. However, the minimum size shall be 1x40 mm dia mild steel conductor.

2. Underground Grid

   i) The ground grid mesh is designed to keep the touch and step voltages within safe limits as per recommendation of IEEE 80 & IEEE665.

ii) The ground grid conductors will be buried in earth at a minimum depth of 1000 mm. The length of ground conductors below earth will be sufficient to ensure a ground resistance less than 0.5 ohm.

iii) The ground grid conductor will be so laid as to provide short and direct connection to building steel and major electrical equipment.

iv) Ground rods shall be provided at the points where system neutrals/lightning protections are connected to the ground grid.

v) All ground grid conductor connections will be welded type.

vi) Main Plant ground grid shall be connected with the other auxiliary building /area ground grid at least at two (2) points.

vii) For test pits, the electrode will be 100 mm dia. Heavy duty C.I. pipe with perforations. Electrodes installed in test pits will have disconnecting facilities

3. Above-ground Connections

i) Galvanized steel flats shall be used for all connections above earth.

ii) Inside building, ground conductors will be run for each floor supported on building steel and/or cable trays. These ground conductors in turn will be connected to the station ground grid through riser (at least two) coming up along building columns/cable shafts.

iii) Two separate and distinct ground connections will be provided for each electrical equipment in compliance with I.E. Rules.

iv) All connections above ground will be welded type except connection to equipment/structures which shall be bolted type.

4. Equipment Ground Lead

Equipment ground connections will be sized to carry the available ground fault current. Considerations shall also be given to mechanical ruggedness of the connections and to limit the number of sizes.

5. Electronic Equipment Grounding

i) Internal ground connection of electronic panels shall be insulated from the enclosure, frame, and chassis are to be terminated to an insulated ground bus.

ii) Insulated ground bus of all electronic panels shall be connected by insulated wire to an insulated common electronic ground bar.

iii) All connection made above shall be in the form of a radial distribution system without any parallel ground paths.

iv) Electronic equipment and systems, metal enclosures of all electronic panels shall be connected to a grounding system with which is isolated and separate from the electrical equipment grounding system.

4.01.04 The minimum conductor sizes for connection of various equipment and structures shall be as given in the attached Notes and Details for Grounding & Lightning Protection Systems.

4.01.05 Entire erection of grounding work shall be carried out in such a way as to be capable of withstanding the intended services of carrying full short circuit level currents to ground mat without any damage / deformation.

4.02.00 Lightning Protection System

4.02.01 Lightning protection work shall be carried out in compliance to the following standards/codes. All standards, specifications and codes of practice (COP) referred to herein shall be the latest editions including all amendments and revisions as on the date of opening of bid. In case of conflict between the specification and those standards/codes referred to herein, the former shall prevail:

a)	Indian Electricity rules	
b)	National Electrical Code	
c)	COP for the protection of building and allied structures against lightning	IS 2309
d)	Recommended practice for hot-dip galvanizing of iron and steel	IS 2629
e)	Method of testing uniformity of coating on zinc coated articles	IS 2633
g)	Methods for determination of mass of zinc coating on zinc coated iron and steel articles	IS 6745
k)	IEEE guide for instrumentation and control equipment grounding in generating stations	IEEE 1050

4.02.02 Basic design criteria are delineated below:

a) The main purposes of the lightning protection system shall be (a) to provide protection to structures from lightning strokes and (b) to provide a low resistance-conducting path to lightning discharge.

b) Lightning protection shall be provided for Power House building, auxiliary building of CHP, AHP, FGD etc. and other structures.

c) Lightning protection will also be provided for building/ structures where the overall rise factor exceeds 10^{-6} as per IS: 2309.

d) For metal structures which are electrically continuous down to the ground level, no lightning protection is required except adequate grounding connections.

4.02.03 Other major design aspects that are to be considered for grounding system are given below:

a) Air termination network with down conductors and earthing electrodes will be provided on the basis of IS Code of Practice.

b) Vertical air terminals shall be of 20mm dia galvanized steel rod on the structure/building (except for chimney).

c) Horizontal air termination of 75x10 mm GS flat conductor on the roof of the installation shall be so laid out that no part of the roof will be more than 9 meters from the nearest conductor.

d) Shielding angle for one vertical air termination shall be 45 degrees. For more than one rod, shielding angle between the rods shall be taken as 60 Degrees.

e) Down conductors of 75x10 mm GS Flat for all installations except for conveyor gallery will run along the outer surfaces of the building and shall have a test joint about 1500 mm above ground. It shall be 25x3 mm GS flat for conveyor gallery.

f) An earth electrode of size 40 mm. diameter 3 metre long MS will be provided at the connection point of the down conductor with the station ground.

g) All connections will be of welded type.

h) Risers (for Lightning protection) shall be of 1x40 (minimum) mm dia. MS rod from underground mat to minimum 300 mm above grade level/concrete floor level.

i) Shielding mast shall be provided at the top of steel columns cap plates of power house building.

j) All other ancillary items in connection with the work described above shall be furnished to complete the work irrespective of whether such items may have been specifically mentioned or not.

4.02.04 All materials and accessories to be supplied by the Bidder shall be brand new ones of reputed make.

4.02.05 Necessary drawings, data sheets and Technical leaflets for each piece of shop produced/fabricated items.

4.03.00 Cabling System

4.03.01 Cabling work shall be carried out in compliance to the following standards/codes. All standards, specifications and codes of practice (COP) referred to herein shall be the latest editions including all amendments and revisions as on the date of opening of bid. In case of conflict between the specification and those standards/codes referred to herein, the former shall prevail:

a)	Indian Electricity rules	
b)	National Electrical Code	
c)	Steel tubes, tubulars and other steel fittings	IS 1239
d)	COP for installation & maintenance of power cables upto and including 33kV rating	IS 1255
e)	Degree of protection provided by enclosures for low voltage switchgear & control gear	IS 2147
f)	Recommended practice for hot-dip galvanizing of iron and steel	IS 2629
g)	Method of testing uniformity of coating on zinc coated articles	IS 2633
h)	Flexible steel conduits for electrical wiring	IS 3480
i)	Cable Glands	BS 6121 / EN 50262
i)	Methods for determination of mass of zinc coating on zinc coated iron and steel articles	IS 6745
j)	Compression type tubular in-line connectors for aluminium conductors of insulated cables	IS 8309
k)	Conduits for electrical installation	IS 9537
l)	Joints & terminations for polymeric cables for working voltages from 3.3kV upto & including 33kV : performance requirements & type tests	IS 13573
m)	Conduit systems for electrical and communication installation	IS 14930

4.03.02 Erection of cabling work shall be carried out in such a way as to provide a reliable and assured electric power supply system to all station auxiliaries.

4.03.03 Cable routing will be done on unit basis as far as possible.

4.03.04 Cables will generally be laid on cable trays, cable trench, cable rack, overhead supported from building steel/structures or cable bridge/cable trestle. Cables shall be run in concrete trenches in transformer yard and in those electrical rooms at ground level, which are without any spreader room below. However cable trench shall be avoided as far as possible in outdoor areas. Cables shall not be buried directly in ground unless explicitly permitted in some areas.

All cable trestle shall be provided with walkway by the side of cable tray for maintenance. Walkway shall have hand railing with 1200 mm minimum height.

4.03.05 Cables will generally be laid on cable trays, cable trench, cable rack, overhead supported from building steel/structures or cable bridge/cable trestle. Cables shall be run in concrete trenches in transformer yard and in those electrical rooms at ground level, which are without any spreader room below.

4.03.06 Cable trench shall be avoided in boiler area and in outdoor areas as far as practicable. Cable shall be laid on cable trays along overhead pipe bridges. Where such overhead pipe bridges are not available, overhead pipe trestles are to be erected for taking the cable racks/trays. Cables buried directly in ground are not acceptable.

4.03.06 In indoor mechanical equipment areas like pump houses, overhead cable trays shall generally be used.

4.03.07 For underground crossing of railways, road, etc. additional protection shall be provided in form of Hume pipe or concrete encased rigid steel conduits (duct bank).

4.03.08 A.C. and D.C. circuit will not be run in same cable. Further, separately fused circuit will run in separate cables.

For Instrumentation cabling system, Bidder shall refer VOL-IIE, Section I of General Technical Requirement Under "C&I Cabling".

4.03.09 Cables for redundant equipment system shall be run in separate trays, as far as possible.

4.03.11 Erection of cabling work shall be executed keeping in view all necessities and requirements of fire fighting codes for Generating Stations having an adverse industrial environment.

4.03.12 Suitable embedded steel inserts shall be provided on wall/floor/ ceiling surfaces for welding of cable tray bracket in order to make the cable tray system withstand, in addition to normal tray cable loadings, horizontal/vertical accelerations due to seismic forces for indoor trays and also wind load for outdoor trays such as on Boiler platforms.

4.03.13 Erection work to be carried out under this specification shall conform to the ‘Notes and Details for Cabling System’ given in Annexure-A and the drawings attached to this specification.

5.00.00 SPECIFIC REQUIREMENTS - SUPPLY

5.01.00 Equipment and Material

5.01.01 Equipment and material shall comply with description, rating, type and size as detailed in this specification, drawings and annexures.

5.01.02 All accessories, fittings, supports, hangers, anchor bolts etc. which form part of the equipment or which are necessary for safe and satisfactory installation and operation of the equipment shall be furnished.

5.01.03 All parts shall be made accurately to standard gauges so as to facilitate replacement and repair. All corresponding parts of similar equipment shall be interchangeable.

5.02.00 Conduits and Accessories

5.02.01 The contractor shall provide and install all conduits, mild steel pipes, flexible conduits, rigid PVC pipes, etc. complete with accessories like tees, bends, adopters, locknuts, pull boxes, conduit plugs, caps, etc as required for the cabling work. Conduits shall be furnished in standard length of 5 metres, threaded at both ends.

5.02.02 Conduits diameter upto and including 25mm size shall be of 16 SWG and conduits above 25 mm diameter shall be of 14 SWG. Minimum diameter of conduits shall be 20 mm.

5.02.03 Conduits shall be made of hot-dip galvanized steel with an organic corrosion resistant ID coating. In chemical handling areas, battery room, etc., the exterior surface shall be further coated with chromate and polymer for better resistance to corrosion. Conduits, fittings & accessories shall have ISI mark.

5.02.04 For sizes above 63 mm, hot dip galvanized - both on inside and outside - steel pipes with necessary fittings & accessories shall be provided and installed by the contractor. The pipes and fittings shall be of heavy duty class with relevant ISI mark.

5.02.05 Flexible conduits complying to relevant IS and made with bright, cold-rolled, annealed and electro-galvanized mild steel strips shall be used between embedded conduits/pipes and the motor terminals. It shall also be used between fixed conduit and any equipment with vibration or equipment requiring regular removal.

5.02.06 Non-metallic conduits made of HDPE outer jacket with friction-reducing permanent internal lining shall generally be used for control & instrumentation cables in some areas where cable trays do not exist and where the runs are

straight ones Necessary fittings & accessories as may be required for the installation shall also be provided.

5.03.00 Junction Box

5.03.01 Technical requirement for both non-metallic type and galvanized steel Junction Boxes are given below. Unless the choice is specifically mentioned in the General / Lead Electrical Specification or elsewhere in the tender document, galvanized steel Junction Boxes shall be offered.

Non-metallic Junction Boxes:

a) Material of the Junction Boxes shall be halogen-free and silicon-free, glass fibre-reinforced polycarbonate for outdoor use and/or for cable sizes more than 50 sq.mm. Material shall be ABS/ polycarbonate for indoor use and/or for cable sizes upto 50 sq. mm. Junction boxes for use with fire-survival cables shall be of Duro-plast / powder-coated metal.

b) Material of all non-metallic junction boxes shall be fire retardant and self-extinguishing in accordance with UL 94 V0. It should be tested at Glow Wire test for 960º C.

c) Boxes shall be suitable for continuous operation at an ambient temperature range of -10º C to +80º C.

d) The impact strength of polycarbonate enclosures/boards i.e. the degree of protection against mechanical shock load shall be in accordance with EN 50298-98 for IK 08 (5 Joule).

e) Degree of protection shall be IP 66 to EN 60529. Junction boxes shall have integrally embedded gaskets made of Polyurethane.

f) Allowing a minimum of 20% spare terminals after complete termination, the terminal board for control and instrumentation JBs shall have 6 /12 / 24 / 36 / 48 ways.

g) Doors shall have stainless steel quick fastening screws.

h) The boxes shall be complete with all brackets/fasteners as required for installation on walls, columns and structure.

5.03.03 Steel Junction Boxes

a. Junction boxes with IP 55 (for Indoor) / IP 65 (for Outdoor) degree of protection, shall comprise of a rectangular parallelepiped case hinged door with Handle constructed from cold rolled sheet steel of minimum thickness 2mm. Top of the box shall be arranged to slope towards the rear of the box. Gland plate shall be 3mm thick sheet steel with neoprene/synthetic rubber gaskets. All junction boxes shall be of

adequate strength and rigidity, hot dip galvanized as per relevant IS with epoxy powder coating paint RAL 7032 with min painting thickness 80 micron and suitable for mounting on wall, column, structures etc. The boxes shall be complete with M8 earthing stud and all brackets/fasteners as required for installation.

b) No. of Ways: 6 / 12 / 24 / 36 / 48 with 20% spare terminals after termination.

c) All outdoor JBs shall be similar but with a canopy at the top.

d) Doors shall be hinged and lockable and shall be made of the same material as the case. The doors shall have industrial heavy-duty hinges. The doors shall be easily but firmly lockable with quick release fastener.

e) The junction boxes shall have the following indelible markings:

i) Circuit nos. on top by white-stenciled paint at site.

ii) Circuit nos. with ferrules (inside) as per approved drawing.

iii) Danger sign in case of 415V circuit.

5.04.00 Terminals

5.04.01 Multiway terminal blocks of approved type, complete with screws, nuts; washers and marking strips shall be furnished for connection of incoming/outgoing wires.

5.04.02 Each control cable terminal shall be suitable for connection of 2 nos. 2.5 sq.mm. stranded copper conductors without any damage to the conductor or looseness of conductors.

5.05.00 Cable Termination & Straight through Joints

5.05.01 Bidder shall supply cable termination and jointing kits in requisite quantity for H.T. Power Cables, L.T. Power, Control Cables, Instrumentation Cables, etc. along with all accessories & consumables required for making termination and joints complete. Those shall be of proven design and make which have already been extensively used and type tested.

5.05.02 Components shall be pre-moulded type, taped type or heat-shrinkable type. 11kV and 3.3kV grade joints and terminations shall be type tested as per IS: 13573.

5.05.03 Kits shall be complete with the alumunium solderless crimping type cable lugs and ferrule as per DIN standard.

5.06.00 Cable Glands

Cable shall be terminated using double compression type cable glands. Cable glands shall conform to BS 6121 or to EN 50262. Ingress Protection rating for cable glands with seal, when offered conforming to EN 50262, shall be minimum IP 66 in line with BS. Cable glands shall be made of tinned brass gland, double compression type complete with necessary armour clamp and tapered washer, etc. Rubber components shall be of neoprene or better synthetic material and of tested quality. Cable glands shall match with the sizes of different cables supplied/erected.

5.07.00 Cable Lugs

Cable lugs shall be suitable for termination of different cross-sections of H.T./L.T./Control/Instrumentation cables and shall be of following types:

i) Aluminium tubular terminal end for solderless crimping to aluminium conductors.

ii) Copper tubular terminal end for solderless crimping to copper conductors.

Solderless crimping of terminals shall be done by using corrosion inhibiting compound. The cable lugs shall suit the type of terminals provided on the equipment. Lugs for control/instrumentation cables shall be PVC insulated/sleeved type.

iii) Cable lugs for control cable termination shall be insulated. These lugs shall be pin type/flat type/ring type / U type to suit the terminals provided in the panels.

5.09.00 Cable Clamps and Straps

5.09.01 Trefoil clamps for single core cables shall be pressure die-cast aluminium or fibre glass or nylon with necessary G I fasteners. Trefoil clamps shall have adequate mechanical strength to forces generated by peak value of maximum system short circuit current.

5.09.02 Cable clamps required for multicore cables on vertical run shall be made up of 25x3mm size aluminium strip. For clamping the multicore cables, self-locking, de-interlocking type fire-resistant nylon clamps/straps of sufficient strength shall be used.

5.10.00 Consumables and Hardware

5.10.01 The Contractor shall furnish all erection materials, hardware and consumables required to complete the installation.

5.10.02 The materials shall include but not be limited to the following:

Consumables : Welding rods & gas, oil and grease, cleaning fluids, paints, electrical tape, soldering materials, etc.

Hardware : Bolts, nuts, washers, screws, brackets, supports, clamps, hangers, saddles, cleats, sills, shims, etc.

5.10.03 Supply of cement, sand, stone, etc. required for the execution of the contract shall be the responsibility of the Contractor.

5.11.00 Testing Equipment

5.11.01 The major testing equipment that are required to be provided by the Contractor are listed below:

a) Insulation Tests

i) Power operated Meggar - 1 KV and 10 KV grade

ii) Hand operated Meggar - 1 KV grade

b) Hand driven earth Resistance Meggar, range 0-1/3/30 ohms.

c) High potential testing set - roller mounted type

d) Tong testers of suitable ranges.

e) Contact resistance measuring set for micro-ohms.

f) Torque wrench of various sizes.

g) Multimeters, test lamp, field telephone with buzzer set, different gauges, etc.

5.11.02 The list of equipment is indicative only. Any other test equipment required will be arranged by the Contractor.

6.00.00 METHODS AND WORKMANSHIP

6.01.00 All work shall be installed in a first class, neat workmanlike manner by mechanics/ electricians skilled in the trade involved.

6.02.00 The erection work shall be supervised by competent supervisors holding relevant supervisory license from the Government.

6.03.00 All details on installation shall be electrically and mechanically correct.

6.04.00 The installation shall be carried out in such a manner as to preserve access to other equipment installed.

7.00.00 INSTALLATION

7.01.00 General

7.01.01 Installation work shall be carried out in accordance with good engineering practices and also as per manufacturer's instructions/ recommendations where the same are available.

7.01.02 Equipment shall be installed in a neat workmanlike manner so that it is level, plumb, square and properly aligned and oriented.

7.01.03 Cable installation work shall mean erection of cable trays/racks, supports, hangers, junction boxes, conduits, laying of cables either in ground or on trays inside trenches tunnels/overhead trays in conduits, etc. dressing and clamping, jointing and termination inclusive of supply of necessary jointing/ termination kits, lugs, glands, ferrules, tapes, etc. and other accessories, grounding of cable armour. In case of direct laying in ground, all excavation work, necessary back-filling, supply of bricks and protective concrete slabs, removal of excess earth shall be part of the installation work.

7.01.04 Grounding installation work shall mean erection, jointing/ brazing/ welding, connection and painting, testing of ground conductors including supply of necessary steel/copper.

7.01.05 Lightning protection system installation work shall mean erection, jointing, welding, connection and painting, testing of air termination network, down conductors, shielding masts, connection to ground grid, electrodes, risers, horizontal conductors, etc. of lightning protection system.

7.02.00 Cable Trays

7.02.01 Pre-fabricated cable trays and accessories shall be assembled & erected at site. Adequate spaces will be provided to facilitate installation of cable system and to allow routine inspection and modification after installation.

7.02.02 Cable trays either inside concrete trenches or inside buildings and racks inside cable shafts shall be aligned and leveled properly. All tray runs shall be installed parallel to the trench/building walls and floors except otherwise noted in the approved drawings.

7.02.03 As far as practicable, cable trays shall be supported from one side only in order to facilitate installation and maintenance of cables from the other side.

7.02.04 The cable trays shall be supported in general at a span of exceeding 1.25 metres horizontally and 1.0 metre vertically.

7.02.05 Sufficient spacing not less than 250 mm shall be provided between trays and maintained to permit adequate access, for installing & maintaining the cables.

7.02.06 Complete cable tray support structure after installation shall be inspected/ tested for welding strength, straightness, accuracy, use of proper sizes and compliance to drawings.

7.02.07 Complete cable tray and accessory installation work shall be inspected/tested for proper alignment, leveling, use of proper accessories, high quality workmanship, etc.

7.02.08 The Contractor shall remove the RCC/steel trench covers whenever required and shall again place the same in their positions after the erection work in the particular area is completed or when further work is not likely to be taken up for some time.

7.02.09 Whenever any pipe/conduit/cable tray emerges out or enters into a building care should be taken to ensure that no water enters into the building.

7.02.10 Cable trays in areas subject to excessive coal dust, oil spillage, mechanical damage or accessible to personal contact shall be provided with raised sheet metal tray covers, installed on upper tray in horizontal run and front in vertical run.

7.02.11 Cable trays/racks shall be so arranged that they do not obstruct or impair clearances of passage way.

7.02.12 Cable tray/conduit system will be so designed as to accommodate maximum pulling tension and minimum bending radius of cable.

7.02.13 Cable tray/conduit system will be constructed to prevent drainage of water into equipment or building.

7.02.14 Cable tray/conduit system shall be electrically continuous and grounded.

7.02.15 Different voltage grade cables will be laid in separate trays when trays are run in tier formation. Power cables will normally be on top trays and control/instrumentation cable on bottom trays.

7.03.00 Cable and Conduits

7.03.01 The Contractor shall install, terminate and connect up all cable and conduits as per drawings and cable schedules.

7.03.02 The drawings shall be strictly followed except where obvious interference occurs. In such cases, the routing shall be changed as directed and/or approved by the Engineer.

7.03.03 Approximate lengths of cable and conduit runs will be shown by the contractor in the cable schedule for guidance only. Before commencement of work the Contractor shall take actual measurements and prepare his own cable-cutting schedule to reduce wastage to a minimum.

7.03.04 The Contractor shall also maintain and submit when requested, a record of cable insulation value when drawn from store, after laying, before and after termination/jointing.

7.03.05 Where direct heat radiation exists, heat isolating barriers, shall be adopted for cabling system.

7.03.06 Cabling/wiring in offices, laboratories, control rooms etc. shall be taken through concealed G.I. or rigid PVC pipes as directed by the owner's Engineer.

7.03.07 At certain places where hazardous fumes/gasses may cause fire to the cables, cable trenches after installation of cables shall be sand filled.

7.04.00 Conduit and Accessories

7.04.01 Conduit/pipes shall be used only in short lengths in certain areas where required and/or as directed by the Engineer.

7.04.02 The Contractor shall furnish all conduits complete with accessories as required.

7.04.03 Conduits shall be flexible type in general. However, rigid type steel conduit if required shall also be supplied by the Contractor.

7.04.04 Except for inside an enclosure wherever the cable enters or leaves the conduit, the conduit end shall be sealed by suitable sealing compound, having fire withstand capability.

7.04.05 The entire metallic conduit system, when embedded or exposed shall be electrically continuous and grounded.

7.04.06 Where it is possible for water or other liquids to enter conduits, sloping of conduit runs and drainage of flow points shall be considered.

7.04.07 Pull boxes will be installed between termination points where required to facilitate cable pulling, but at a maximum interval of 30 meters.

7.04.08 Conduits shall be firmly fastened within 900 mm of each junction box/pull box/cabinet/fitting, etc. Conduits shall be supported at least every 2000 mm.

7.05.00 Cables: Storage and Handling

7.05.01 Cable drums shall be stored on hard and well-drained surface so that they may not sink. In no case shall the drum be stored on the flat, i.e., with flange horizontal.

7.05.02 Rolling of drums shall be avoided as far as practicable, for short distance, the drums may be rolled provided they are rolled slowly and in proper direction as

marked on the drum. In absence of any indication, the drums may be rolled in the same direction as it was rolled during taking up the cable.

7.05.03 For unreeling the cable, the drum shall be mounted on jacks or on cable wheel. The spindle shall be strong enough to carry the weight without bending. The drum shall be rolled on the spindle slowly so that the cable should come out over the drum and not below the drum.

7.05.04 While laying cable, cable rollers shall be used at an interval of 2000 mm. The cables shall be pushed over the roller by a gang of people positioned in between rollers over a suitable distance. Care shall be taken so that kinks and twists or any mechanical damage does not occur in cables. Only approved cable pulling grips or other devices shall be used. Cables shall not be dragged on ground or along structure while laying out from cable drums. Cable shall not be pulled from the end without having intermediate pushing arrangement. Bending radius of the cable during installation shall not be less than what is specified by the manufacturer.

7.05.05 Empty cable drums shall be returned to the Owner.

7.06.00 Cable Laying

7.06.01 Cable shall generally be installed in ladder type prefabricated trays except for some short run in rigid/flexible conduit for protection or crossings.

7.06.02 Cables laid on trays and risers shall be neatly dressed and clamped with self-locking type fire resistant nylon ties at an interval of 750 mm. for horizontal and vertical runs, in case of both power, control and instrumentation cables.

7.06.03 Single core power cables for 3 Ph. AC circuits shall be laid in trefoil formation and suitably clamped with self-locking type fire resistant nylon ties at an interval of 750 mm.

7.06.04 L.T. multicore power cables with cross-sectional area of 95 sq.mm and above and all H.T. multicore power cables and shall be clamped individually by self-locking type fire resistant nylon ties.

7.06.05 L.T. power cables of cross sectional area less than 95 sq.mm and all control and Instrumentation cables shall be clamped in bunches with self-locking type fire resistant nylon ties. The number of cable in one bunch shall not exceed eight (8).

7.06.06 Prior to laying of cables inside the indoor and outdoor trenches, the contractor shall properly clean the trenches.

7.06.07 In outdoor areas, buried cables shall be laid and covered with sand/riddled earth and protected from damage by bricks at sides and precast slab at top.

7.06.08 When buried cables cross road/railway track, adequate protection shall be provided in the form of hume/galvanised iron pipes laid at a minimum depth of 1 meter below ground.

7.07.00 Cable Tags & Markers

7.07.01 Each cable and conduit run shall be tagged with numbers that appear in the cable and conduit schedules. Cables and conduits shall be tagged at their entrance, bends, every 30.0M and exit from any equipment, junction box. When a cable/conduit passes through a wall, tags shall be fitted on both sides of the wall.

7.07.02 The tags shall be of aluminium with the number punched on it and securely attached to the cable by not less than two turns of 16 SWG G.I. wire. For single core cable the wire shall be of non-magnetic material.

7.07.03 Location of cable joints, if any, shall be clearly indicated with cable marker with an additional inscription 'cable-joint'.

7.07.04 Contractor shall furnish and install all tags and markers stated above.

7.07.05 For buried cable, the marker shall project 150 mm above ground and shall be spaced at an interval of 30 meters and at every change of direction.

7.08.00 Cable Termination and Connection

7.08.01 Termination and connection of cables shall be done strictly in accordance with manufacturer's instruction, drawings and/or as directed by the Engineer.

7.08.02 Work shall include all clamping, fitting, fixing, soldering, tapping, compound filling, cable jointing, crimping, shorting and grounding as required for the complete job. All equipment required for all such operations shall be of Contractor's procurement. Furnishing of all consumable materials such as soldering material, electrical tape, sealing material as well as cable jointing kits shall be included in the offer.

7.08.04 Cable joint kits for all cables shall be supplied by Contractor under this specification. Responsibility for proper termination shall lie on the contractor. Guarantee for termination shall also have to be given by Contractor.

7.08.05 The equipment will be generally provided with blank bottom plates for cable/conduit entry and cable end box for power cables.

7.08.06 The Contractor shall perform all drilling, cutting on the blank plate and any minor modification work required to complete the job.

7.08.07 If the cable end box or terminal enclosure provided on the equipment is found unsuitable and requires major modification, the same shall be carried out by the contractor.

7.08.08 Control/instrumentation cable cores entering control panel/ switchgear/ MCC, etc. shall be neatly bunched and served with PVC perforated tape to keep it in position at the terminal block.

7.08.09 The Contractor shall put ferrules on all control cable cores in all junction boxes and at all terminations. The ferrules shall carry terminal numbers as per drawings. All ferrules shall be coloured, plastic & interlocked type.

7.08.10 Spare cores shall be similarly ferruled, crimped with lug and taped on the ends. Spare cores shall be ferruled with individual cable number.

7.08.11 Termination and connection shall be carried out in such a manner as to avoid strain on the terminals.

7.08.12 All cable entry points shall be properly sealed and made vermin and dust proof. Unusual opening, if any, shall be effectively closed. Sealing work shall be carried out with approved sealing compound having fire withstand capability for at least three hours.

7.08.13 Strips and special tools like manually or pneumatically driven gun/pistol for termi-point/equivalent connection shall be supplied by the Contractor.

7.09.00 Cable Joints

7.09.01 Cable shall be installed without joints as far as practicable.

7.09.02 If however jointing becomes necessary, it shall be made only by qualified cable jointer and strictly in accordance with manufacturer's recommendation.

7.10.00 Grounding

7.10.01 If supply and laying of the underground mat is included in the scope of the Contractor, the Contractor will plan and organize works to lay the grounding mat in the same sequence in which the building and equipment foundation is being done.

7.10.02 Underground mat will be made of mild steel rods laid underground in length and breadth of the area at a depth of minimum 1 metre below grade level. All crossings and straight run shall be arc welded for good electrical continuity. Ground conductors, when crossing underground trenches, directly laid underground pipe and equipment foundation, if any, shall be at least 300 mm below the bottom elevation of such trenches/pipes as shown in the relevant drawing.

7.10.03 Contractor shall carryout the interconnection among various peripheral earthing grids/mats, steel structures, lightning protection system as well as grounding of all electrical equipment, etc. The grounding work shall be carried out as per provisions of I.E. rules, Indian standards and Annexure-E: Notes & Details for Grounding & Lightning Protection System.

7.10.04 Grounding shall be done by conductors of adequate sizes (size shall be selected by the bidder with supporting calculation, if not specified) and the same shall be connected to the risers of main ground mat.

7.10.05 For fabricated cable trays, a separate ground conductor (50x6 mm G.S. flat) shall run along the entire length of each route of cable tray being suitably clamped on the cable tray. Individual cable trays of each section shall be connected to above ground conductor through 50x6 mm G.S. flat to maintain continuity of ground path.

7.10.06 All ground conductor connections shall be made by electric arc welding/ brazing unless otherwise specified. Ground connections shall be made from nearest available station ground grid risers. The rods/connection shall be coated with cold galvanizing /weather resistance anti corrosive paints.

7.10.07 All ground conductors shall be painted black for easy identification.

7.10.08 Equipment ground connections, after being checked and tested by the Engineer, shall be coated with anti-corrosive paint.

7.10.09 Whether specifically shown or not in Project drawings, all conduits, trays, cable armour and cable end box, electrical equipment such as motors, switchboards, panels, cabinets, junction boxes, lockout switches, fittings, fixtures, etc. shall be effectively grounded.

7.10.10 If there is no provision to ground the L.T. transformer neutral at transformer end, to make an effectively earthed 415V system the neutral bus of all 415V distribution boards shall be connected to ground grid at two different and distinct points.

7.10.11 Ground Electrode

Ground electrodes are to be fabricated and driven into the ground by the side of mat conductor. All connections to the conductors shall be done by are wilding process.

7.10.12 Risers

Risers are required for connecting the equipment and structures with the ground mat. These will be 1x40 mm dia (minimum) M.S. rod. laid from ground mat to above ground level properly clamped or supported along the outer edge of the concrete foundation. Connection to the ground mat shall be done by arc welding and the other end is to be kept free at least 300 mm above grade level/concrete floor level unless otherwise shown.

7.10.13 Column Grounding

All columns are required to be grounded by 1x40 mm dia (minimum) M.S. rod from ground mat. Laying, supporting along with foundation, connecting at ground mat are within the scope of this specification. At least 300 mm length

of the above rods shall be left free above the grade level/concrete floor level for connection with columns.

7.10.14 Electronic Equipment Grounding

Internal ground connection of electronic panels shall be insulated from the enclosure, frame, chasis and to be terminated to an insulated ground bus.

Insulated ground bus of all electronic panels shall be connected by insulated wire to an insulated common electronic ground bar.

All connection made above shall be in the form of a radial distribution system without any parallel ground paths.

Electronic equipment and systems, metal enclosures of all electronic panels shall be connected to a grounding system with which is isolated and separate from the electrical equipment grounding system. Separate Earth pit shall be made by 3M X 3M MS Rod.

7.11.00 Painting

Contractor shall paint steel fabrications at site with two (2) coats of red oxide primer and two (2) coats of battleship grey (shade no. 632 of IS:5) synthetic enamel paint. In case a different kind of primer or a finish shade is mentioned in the Lead/General Specification due to especially corrosive atmosphere, the same shall be followed.

7.12.00 Galvanizing

Galvanizing shall be uniform, clean, smooth, continuous and free from acid spots. Should the galvanizing of the samples be found defective, the entire batch of steel has to be re-galvanized, at Contractor's cost. The amount of zinc deposit shall not be less than 610 grams per square metre of surface area. Additionally, the thickness of the zinc deposit at any spot shall not be less than 75 microns. The Owner reserves the right to measure the thickness of zinc deposit by appropriate instrument and reject any component which shows thickness of zinc at any location less than 75 microns.

7.13.00 Excavation and Back Filling

7.13.01 Contractor shall perform all excavation and backfilling to the original level with good consolidation as required for buried cable and ground connections. Sheeting and shoring shall be done as necessary for protection of the work.

7.13.02 Contractor shall make his own arrangements for pumping out any water that may be accumulated in the excavation.

7.14.00 Steel Fabrication

7.14.01 All racks, trays, supports, hangers & brackets wherever necessary shall be fabricated by the Contractor.

7.14.02 Steel for fabrication shall be straightened and cleaned of rust and grease. All fabrication shall be free of sharp edge and burns so as not to cause any damage to personnel or cables.

7.15.00 Cleaning up of Work Site

7.15.01 The Contractor shall, from time to time, remove all rubbish resulting from execution of his work. No materials shall be stored or placed on passage or drive ways.

7.15.02 Upon completion of work, the Contractor shall remove all rubbish, tools, scaffoldings, temporary structures and surplus materials etc. to leave the premises clean and fit for use.

8.00.00 TESTS

8.01.00 Shop Tests

8.01.01 All equipment shall be completely assembled, wired, adjusted and routine tested as per relevant Indian Standards at manufacturer's works.

8.01.02 Tests on panels/junction boxes shall include:

a) Wiring continuity tests.
b) High voltage and insulation tests.
c) Operational tests.

8.02.00 Site Tests

8.02.01 Contractor shall thoroughly test and meggar all cables, wires and equipment to prove the same are free from ground and short circuit.

8.02.02 If any ground or short circuit is found, the fault shall be rectified or the cable and/or equipment replaced.

8.02.03 All power cables after installation and prior to connections shall be subjected to High Potential tests. Also the insulation resistance values shall be measured both before and after Hipot test for comparison. The leakage current shall also be measured during the Hipot test at site.

Cable cores shall be tested for :
a) Physical damage
b) Continuity
c) Correctness of connections as per relevant wiring diagram
d) Insulation resistance to earth
e) Insulation resistance between conductors

f) Proper earth connections of cable glands, cable boxes, cable armour, screens etc.

8.02.04 All equipment shall be demonstrated to operate in accordance with the requirements of this specification.

8.03.00 Test Certificates

8.03.01 Type test certificate on any equipment, if so desired by the Owner, shall be furnished. Otherwise the equipment shall have to be type tested, free of charge, to prove the design.

9.00.00 DRAWINGS, DATA & MANUALS

9.01.00 To be submitted with the Bid

9.01.01 Make, type and catalogue number of different electrical items and accessories along with technical leaflets, data sheets etc.

9.01.02 Typical General arrangement drawings showing constructional features, fixing arrangement of pre-fabricated cable trays.

9.01.03 Bill of Materials for cable trays and accessories, conduits & accessories.

9.01.04 Layout of Grounding system & lightning protection system showing connection and other details along with backup design calculations and detailed write up.

9.01.05 Bill of materials for grounding and lightning protection system.

9.01.06 Drawing showing details of equipment grounding.

9.02.00 To be submitted after Award of Contract

9.02.01 Make, type & catalogue number of cable termination kits, joints & accessories.

9.02.02 Detail dimensional drawings showing constructional features, grounding, fixing arrangement etc.

9.02.03 Bill of Materials for Pre-fabricated cable tray and accessories, Conduits & accessories.

9.02.04 Dimensional G.A. drawings and data sheets for different equipment and items supplied under this specification.

9.02.05 Layout drawing of Grounding system and Lightning protection system showing connection details along with backup design calculation and detailed write up.

9.02.06 Bill of material for grounding system and lightning protection system.

9.02.07 Drawing showing details of equipment grounding system.

Annexure-A

DETAILS FOR FIRE-PROOF CABLE PENETRATION SEALING SYSTEM

1.00.00 General

1.01.00 The Fire proof sealing, fire stop system and fire protection coating system are required to prevent spreading of fire from one place to other place (or one zone to other zone) through the openings in wall / floor, cables laid in trays / racks and openings below Electrical Switchgear, MCC, DB,/ Cabinets, Panels etc.

1.02.00 The fire-proof cable penetration (FPCP) sealing system shall conform to the requirement of BS: 476 Part 20 (latest edition with all amendments).

2.00.00 Scope of Work

The scope of work includes but is not limited to the following items of supply and installation:

i) Fire Stops in wall and floors

ii) Fire stops below switchgear, MCC, Switchboards, DBs, junction boxes / panels / cabinets, etc. which are floor mounted type

iii) Fire retardant coating to be applied for installed cables

iv) Fire proof barrier walls

v) Fire proof doors

vi) Minor civil and structural works for installation of the entire work

vii) Necessary erection materials, consumables and sundry items to complete the work for satisfactory and trouble free operation

viii) Any special tools & tackles

ix) Conducting the type test of fire proof sealing system in presence of Owner's Engineers

x) All relevant Drawings, Data sheets and instruction manuals

3.00.00 Design Criteria

3.01.00 Fire Proof Cable Penetration Sealing System

The material / components used for fire-proof sealing (FPCP) system shall be provided to meet the following requirements:

i) The product shall be age tested for not less than 30 years.

ii) Shall be free from shrinkage or cracking; should achieve smoke and gas tightness during fire and should be modifiable.

iii) Not to generate toxic or corrosive gas and cause harm to the personnel handling the system.

iv) Prohibition of production of acid or alkali during gas generation.

v) Shall be repellant to pest / rodent / termite.

vi) Expansion co-efficient - very low which is to be comparable with masonry concrete.

vii) Not soluble / reactive to acid, water, alkali.

viii) Thermal conductivity - low.

ix) The material in contact with the cables in the FPCP sealing system shall be compatible with the material used for outer sheath of cables.

x) It should not have any adverse effect on the cables and should not alter the current carrying capacity of the cables.

xi) Retrofit in design to accommodate not less than 15% more addition of cables depending upon the size of cables, physically and chemically stable.

xii) Capable of withstanding vibrations, drop-loads, foot traffics, mechanical loads, etc.

xiii) The sealing system shall maintain its integrity and perform satisfactorily even after

a. Remaining in water for a long time.

b. Accelerated thermal aging.

c. Sustaining vibrations.

xiv) The design and construction of FPCP sealing system shall specifically take into account the fact that under seismic disturbances, normal load, short circuit and fire conditions, the cable / cable trays will be subject to movement, expansion and oscillation and this shall not result in any damage or cause dislocation of the FPCP sealing system or the material constituting the FPCP sealing System.

xv) Non-hygroscopic, non-inflammable and shall not get affected over a period of time due to humidity, moisture and ozone etc. and should not

contain volatile solvents which may cause a fire hazard during application.

xvi) The fire sealing system to be installed at floor openings below C&I panels, control panels/boards etc. in Central Electrical Room, Central Control Room, Central Electronic Room shall have a fire rating of not less than two (2) hours. The fire sealing system to be installed at all other places like the rest of the wall and floor crossings of cables/cable trays, openings below Switchgears/Boards etc. shall have a fire rating of one (1) hour. The system shall be stable after application of water jet in the exposed side in order to extinguish fire.

3.02.00 Fire Protection coating to be applied on installed cables:

A. The cables shall be coated with fire protection material of 2 mm dry thickness at the strategic locations as follows so as to limit the spread of fire:

i) At fire stops in walls and floors on either side upto 500 mm length.

ii) At fire stop below Electrical Switchgears/ MCCs/ Panels/ Cabins, etc. on one side coating of 500 mm length, i.e., on the cable vault side / cable trench side.

iii) Length of 500 mm on all sides of the junction/crossing of cabling work in open cable routes/ cable trench.

iv) In fire risk areas and where specified at suitable intervals as decided upon side conditions in open cable routes.

v) Where necessary and specified at site intervals along cable routes in cable trenches.

vi) The coating shall be applied evenly on the cables only.

B. The fire protection coating shall have the following properties/composition:

i) Asbestos-free, non-volatile, not eatable by vermin, harmless and non-irritant to human skin.

ii) Not affecting the current carrying capacity of the cables and the properties of the installed cables.

iii) It shall delay fire damage to cables and prevent flame spreading meeting the requirement of IEC - 332.

iv) Coating material shall show no signs of cracking and peeling when the coated cable is bent to the radius of minimum 12 times the diameter of the maximum size cable at 180°C.

v) The limiting oxygen index of the material shall not be less than 60% as per ASTMD - 2863.

vi) Life expectancy equivalent to the cable installations.

3.03.00 The various openings in the cable vault, vertical, horizontal raceways of cables penetrating walls, floors and the bottom of Electrical switchgears, MCCs, distribution boards, Cabinets, Panels shall be provided with fire stop systems. Cables passing through the openings at various locations are laid on various tiers of the cable trays/ racks in the bunch formation. Bidder shall visit the site to assess and get acquainted with the type of cable installation where fire stops and fire protection coating are to be provided. In case steel frames are required to be fabricated and fixed in the openings, the fabrication of frame & fixing of the same shall have to be done by the Contractor without any extra cost. The necessary steel section for fabrication of frames shall be supplied by the Contractor without any extra cost. Any civil works required to be done in the openings shall be carried out by the Bidder. Bidder shall also include one set of tools & accessories required for addition or removal of cables after the seal is made.

3.04.00 The bidder shall quote the unit rates for provision of supply, installation, testing & commissioning of the fire proof seals as given in the specification. Bidder is requested to quote the unit rates per square metre (i.e., area) basis of the area of the fire sealing material.

4.00.00 Type Test on Penetration Seals

4.01.00 The type tests for fire proof/ penetration seal for floor and wall opening/ fire stop system for bottom of electrical switchgear/ MCC/ panel base are as under:

i) Fire rating test

ii) Hose Stream test

iii) Accelerated aging test

iv) Fire rating test on the penetration seal system built out of accelerated aged components followed by hose stream test

v) Temp. rise test for cable in the fire stop

vi) Water absorption test followed by fire rating test

vii) Flame Resistance test for fire retardant coating material

viii) Anti-rodent test

4.02.00 Fire Rating Test

This test shall be carried out to prove the guaranteed power rating duration of the system in respect of stability, integrity and insulation characteristics of the complete system. The penetration seal system as a whole conforming to ASTM 814 and as per BS:476 Part-8 shall be built with the necessary component. The fire test shall be built with the necessary component.

The test specimen of the penetration seal built with 9-10 nos. armoured cables of various sizes passing through the seal shall be fitted to the gas fired furnace and shall form the upper most face of the furnace. The gas fired furnace shall have provision to achieve standard time temperature characteristics for fire tests as mentioned in BS-476 Part-8, according to which the temperature required to be maintained are as under:

Heating time (minute)	30	90	120	150	180	210	240
Furnace temp (°C)	821	886	1029	1062	1090	1113	1133

The pressure inside the furnace at the time of test shall be more than 2 mm water gauge. The penetration shall be subjected to fire test with surface exposed to controlled fire in the furnace conforming to time / temperature characteristics as mentioned above. During the test, temperatures of both the faces of the penetration seal i.e. one which is exposed to fire and the other unexposed, shall be measured by calibrated thermocouples after regular interval of 5 minutes. At least 3 thermocouples shall be provided for temperature measurement of each face.

4.03.00 The results at the end of the tests shall be interpreted or failure criteria as under:

i) The system is deemed to have failed to maintain stability if there is a total collapse of the penetration seal.

ii) In case cracks are seen on the face of the penetration seal or cracks through the seal system through which the flame / or gas can pass, the system is deemed to have failed to maintain integrity. The development of crack is characterized by ignition cotton wool held near the seal on the unexposed surface at a distance of about 30 mm from the aperture.

iii) In case the mean temperature rise of unexposed surface of seal exceeds 140°C above the initial temperature or temperature of unexposed surface exceeds 180°C, the system shall deemed to have failed in respect of insulation characteristics.

iv) Temperature measurement on the unexposed side of the penetration seal specimen shall be measured by the thermocouple on the surface of penetrating items and on fire stop material in accordance with ATME-814/UL 1479 at a distance of 25 mm from fire stop material and penetration items respectively.

4.04.00 Hose Stream Test:

The intention of the hose stream test is to ascertain whether the penetration seal assembly maintains its stability on application of water jet after withstanding the fire for 3 hours i.e. the guaranteed fire rating duration.

The test apparatus for this test shall be similar to the one used for carrying out the fire rating test. The penetration seal system shall be subjected to the action of hose stream at the nozzle pressure of 30 psi supplied for a duration of 1.5 sec./ sq.ft.. of exposed area. The hose stream shall be applied with 1.1/ 8" dia. nozzle at a perpendicular distance of approximately 17 ft. from the centre of the assembly on a line approximately 270 deg. from the line normal to the centre for the test assembly. The water stream shall be applied within 4 minutes and 30 seconds after completion of fire rating test.

However, this period shall not exceed more than 10 minutes in case of practical difficulties experienced by testing stations. The application of water stream shall be maintained throughout the test duration and shall traverse the complete fire stop system.

The fire stop assembly is deemed to have passed the hose stream test successfully if no through projection of water is noticed on the unexposed surface of the seal. Further on completion of hose stream test, the appearance of the penetration seal system shall not alter substantially indicating thereby that the stability of the system has been maintained.

4.05.00 Accelerated aging test

The intention of accelerated aging test is to ascertain whether the artificial aging of the systems and components thereof results into change in the mechanical properties or in the form. In order to simulate aging, artificial aging shall be resorted to.

For the purpose of subjecting the penetrations seal system components to accelerated aging, the system / components shall be stored for 336 hours in air furnace where the temperature of the inside air, shall be maintained at 100° C. However, for system components in pliable form, system component shall be stored for 448 hours in air furnace where temp. of air inside the furnace shall be maintained at 75° C. It is assumed that the changes occurring during test period would roughly correspond to the effect on aging over a period of about 40 years.

After completion of 336 hours / 448 hours, the mechanical properties such as tensile strength element, elongation and hardness of the material (as may be applicable) shall be tested. These results shall be compared with corresponding values before subjecting to accelerated aging test.

The change in the form of system / components shall also be compared with the form before the tests to ascertain whether the system / components thereof have undergone any permanent change.

In case the mechanical properties before and after the accelerated aging do not indicate substantial change, the system shall be deemed to have passed the accelerated aging test. Similarly the variation in the form of the system components at the end of the test shall not indicate permanent deformation which is likely to affect the ceiling properties of the system.

4.06.00 Fire Rating test After Accelerated Aging:

Intention to this test is to ascertain whether the penetration seal built out of components already subjected to accelerated aging still passes the fire rating test for guaranteed fire rating duration.

The test apparatus for this test shall be similar to the one used for fire rating test mentioned above. The assembly or the penetration seal shall be carried out with the components which were subjected to accelerated aging test based on the test procedure mentioned above. In case there is a problem of co-ordination with the test station, the prototype assembly may be subjected to aging in manufacturer's works under the conditions mentioned above and live fire test should be carried out at manufacturer's works in presence of Owner's representative.

In live fire test, the temperature of fire shall be of the order of 1000° C at the end of 3 hours. The test shall be carried out at atmospheric pressure.

The interpretation of test results for failure shall be similar to those mentioned under fire rating test/live fire test above.

4.07.00 Temperature rise test for cable in the fire stop:

This test shall be carried out to ascertain whether due to inadequate dissipation of heat at the location of fire stop, the temperature of cable conductor or outer sheath in contact with the fire stop, rises beyond the acceptable limits due to which whether any derating is required for cables.

Fire stop systems shall be erected with, at least 8-10 armoured cables, specially power cables. While laying the cable through penetration seal, thermocouple shall be placed on the outer surface of cable in contact with the fire stop system. The location shall be selected where there exists possibility of inadequate dissipation of heat from cables to the atmosphere due to fire stop components. Two thermocouples shall also be located on the two surfaces of the fire penetration seal system. Similarly thermocouples shall also be placed on the other surface of cables where there exists contact of free air without any obstruction so as to enable adequate nature cooling.

In case the temperature of outer surface of the cable in contact or inside the fire stop system does not exceed 75° C, it is inferred that no derating of cable is required for cable when used in conjunction with the particular fire stop system.

Test shall be repeated with reduced current till the temperature of cable outer surface in contact with fire stop system is limited to 75°C. The rate of the current so guaranteed by the cable manufacturer as free air rating shall be the derating factor.

4.08.00 Water Absorption Test:

The test specimen shall be immersed in fresh clean water at a temp. of 20°C. The test specimen must be separated from the bottom and sides of the soak tank by at least 10 mm and it shall be covered by approximately 25 mm of water. At the end of the 24 hours soak period, the specimen shall be removed from the water and moped up with a damp cloth.

Fire rating test after water absorption is to ascertain whether the penetration seal subjected to water absorption still passes the fire rating test for guaranteed fire rating duration.

Test apparatus for this test shall be similar to the one used for fire rating test. In case there is problem of coordination with test stations, the prototype assembly may be subject to water absorption test at manufacturer's works followed by live fire test which should be carried out at manufacturer's works in presence of Owner's representative. In line fire test, the temperature of furnace shall be of the order of 1000°C at the end of 3 hours. The test shall be carried out at atmospheric pressure.

4.09.00 Flame Resistance Test for fire Retardant Coating Material:

Sample strips shall be of ½ " wide, 12" long and approximately 70 mills in thick (without any reinforcement). Each strip shall be held vertically (clamped at the top) in a natural gas burner flame, (blue cone of flame touching bottom edge of sample) for 10 minutes. The flame shall then be removed and observation shall be recorded. In case, any flaming of the samples should cease after the removal of gas burner. White charred length of the sample should not exceed 1 & ½".

4.10.00 Anti-Rodent Test:

Physical tests:

a) This test shall be carried out to ascertain the anti-rodent properties of the components of the Fire proof sealing system.

b) This test shall be carried out at approved test station performing sealing system tests on pharmaceutical products. The complete Fire Proof sealing system shall be subjected to attack of inspect / vermin such as rate for about 20 days.

c) At the end of the test condition of the surface of Fire Proof sealing system the test material shall be compared with the surface condition before commencement of the test. The fire stop shall be deemed to have passed this test in case no marks of growth are seen on the surface.

5.00.00 Test Certificates

5.01.00 Certified copies of all tests carried out at works and at site shall be furnished in requisite number of copies.

5.02.00 Test reports shall be complete with all details and shall also contain limit valves specified in the relevant standards, wherever applicable, to facilitate review of Test Report/ Certificates.

5.03.00 The fire proof sealing system shall be installed only after receipt of approval of the test reports.

VOLUME: II-F/2

SECTION-VIII

TECHNICAL SPECIFICATION

ERECTION OF INDOOR AND OUTDOOR ELECTRICAL EQUIPMENT

CONTENT

CLAUSE NO.	DESCRIPTION	PAGE NO.
1.00.00	SCOPE OF WORK	1
2.00.00	SCOPE OF SUPPLY & SERVICES	1
3.00.00	TESTS	5
4.00.00	DRAWINGS, DATA AND MANUALS	7
	ATTACHEMENTS	
ANNEXURE-A	SCHEDULE OF PRE-COMMISSIONING TESTS OF TRANSFORMER AND OTHER EQUIPMENT	8
ANNEXURE-B	DETAILS FOR CABLE TRAYS, FITTINGS & ACCESSORIES	13

SECTION - VIII

ERECTION OF INDOOR AND OUTDOOR ELECTRICAL EQUIPMENT

1.00.00 SCOPE OF WORK

1.01.00 Scope of work shall cover complete and efficient erection, testing and commissioning and putting into successful commercial operation of all Outdoor and Indoor electrical equipment supplied under Main plant package.

1.02.00 Scope of work shall also include all civil and structural works necessary for successful installation and commercial operation of all electrical equipment to be erected under this specification.

2.00.00 SCOPE OF SUPPLY & SERVICES

2.01.00 Items to be supplied

2.01.01 Miscellaneous steel structures, tray supports, hangers & brackets for cable trays, mounting of local panels, push button stations etc. shall be supplied. Any material or accessory, which may not have been specifically mentioned but which is usual and/or necessary shall be supplied.

2.01.02 Insulating rubber mat of 1 meter width and conforming to IS 15652-2006 for laying in the front along the entire length of panels for the safety of operating personnel. The mat shall conform to the appropriate voltage class as per the said Standard.

2.01.03 All hardware, materials and miscellaneous items required to complete the erection job under this specification. All such hardware, materials and accessories shall be brand new ones of reputed make.

2.01.04 Spare Parts

2.01.05 All relevant drawings, data sheet and technical leaflets on each piece of devices.

2.02.00 Scope of Services

The work includes but is not limited to the followings:

2.02.01 Furnishing of all erection tools and tackle, testing equipment, implements, supplies, consumables and hardware for timely and efficient execution of the erection work. Hydraulic jacks or motorized jacks necessary for lifting of heavy equipment shall be provided by the contractor.

2.02.02 Transport vehicles necessary for efficient transportation of equipment from stores to site of erection and excess materials back to stores.

2.02.03 A general list of the outdoor and indoor Electrical Equipment with accessories for complete assembly, erection and connection, testing and commissioning, putting into successful and satisfactory commercial operations by the contractor and as applicable in a power generating plant is given below. Since plant configuration varies from project to project, actual equipment and accessories shall also be guided by other specification documents.

a) Cubicles for Generator Excitation System & Accessories

b) Generator Transformers

c) Generator Busduct and auxiliary equipment

d) Unit Transformers & Unit Aux Transformers

e) Station Transformers & Station Aux Transformers

f) 11/3.3 KV Oil filled Transformers & 11/0.415 KV L.T. Transformers

g) Lighting Transformers

h) Stringing and connections between the switchyard and transformer yard

i) Neutral Grounding Resistor Cubicles

k) 11kV, 3.3kV Busducts

l) 415 V Busduct

m) 11kV and 3.3kV Switchgears

n) 415 V Switchgears (PCC, PMCC, MCC,ACDB etc.)

o) Motor Control Centres, A.C./D.C. Distribution boards, Main lighting distribution boards and miscellaneous items.

p) Battery and Battery Chargers, Uninterrupted Power Supply Panels

q) Electrical Control Desks / Panels, Relay Panels, Data logger Panels etc.

r) Miscellaneous Local Panels.

s) EHV Lightning Arrestors & BPI (for transformer yard)

t) Intercommunication and Telephone system

u) All electrical equipment and systems integral with mechanical equipment, systems and subsystems.

v) Any other equipment not mentioned herein but required for the completing the Plant shall be deemed included in the scope.

2.02.04 Entire erection work shall be carried out in a phased manner. A schedule of the work showing the sequence of erection shall be submitted by the tenderer for this purpose.

2.02.05 Erection schedule, as approved by the Owner's Engineer (OE) shall be strictly followed by the contractor. If, for any reason beyond the control of the

Contractor, the work is held up then the Contractor shall bring it to the notice of the OE without any delay.

2.02.06 Erection work of equipment shall be carried out in a neat and efficient way so as not to impair their normal functioning in any way.

2.02.07 Pre-commissioning checks as well as commissioning of different equipment shall be carried out as per guidance of actual manufacturer's supervisor and or as per written instructions in Erection Manuals. In case of any site related problem in commissioning activities, contractor shall seek advice of the OE.

2.02.08 All erection work under this specification shall be carried out strictly in accordance with the approved drawings.

2.03.00 Methods and Workmanship

2.03.01 All work shall be installed in a first class, neat workmanlike manner by mechanics/electricians skilled in the trade involved.

2.03.02 The erection work shall be supervised by competent supervisors holding relevant supervisory license from the Government.

2.03.03 All details on installation shall be electrically and mechanically correct.

The installation shall be carried out in such a manner as to preserve access to other equipment installation.

In order to avoid concentration of stresses, all sharp edges of clamps, connectors etc. shall be rounded off.

2.04.00 Consumables and Hardware

2.04.01 The Contractor shall furnish all erection materials, hardware and consumables required for the completion of the installation.

2.04.02 The materials shall include but not be limited to the following:

a) Consumables: Welding rods & gas, oil and grease, cleaning fluids, paints, electrical tape, soldering materials etc.

b) Hardware : Bolts, nuts, washers, screws, brackets, supports, clamps, hangers, saddles, cleats, sills, shims etc.

c) Materials : Junction boxes, terminal blocks, connectors, ferrules, lugs, brass glands, rigid/flexible conduits, cables, ground wires etc.

2.04.03 Supply of cement, sand, stone etc. required for the execution of the contract shall be the responsibility of the Contractor.

2.05.00 Installation – General

2.05.01 Installation work shall be carried out in accordance with good engineering practices and also the manufacturer's instructions/recommendations where the same are available.

2.05.02 Equipment shall be installed in a neat workmanlike manner so that it is level, plumb, square and properly aligned and oriented.

2.05.03 All erection work shall be carried out in strict compliance with manufacturer's instructions and shall include all necessary adjustments, checks and measurements.

2.05.04 All internal wiring of the equipment which has been left incomplete because of shipping split or which requires minor modifications shall be carried out by the contractor.

2.05.05 The contractor shall record results of all erection tests and measurements. The contractor shall submit copies of those test results to the Owner for his reference and record.

2.05.06 High voltage test of transformer oil shall be carried out taking samples from individual transformer and also from each insulating oil drum. If the result of di-electric test is not to the satisfaction of the Engineer, oil filtration, heat run and conditioning shall be carried out for the concerned transformer to improve the dielectric strength of oil and insulation to the acceptable value.

2.05.07 The storage and installation of transformer with all its accessories shall be carried out in strict compliance with manufacturer's instructions. Extreme care shall be taken to avoid ingress of moisture and foreign particles into the transformer tank.

2.06.00 Steel Fabrication

2.06.01 All racks, supports, hangers and brackets wherever necessary for equipment erection shall be fabricated by the contractor.

2.06.02 Steel for fabrication shall be straightened and cleaned of rust and grease. All fabrication shall be free of sharp edges.

2.07.00 Painting

2.07.01 The Contractor shall paint all racks, supports and miscellaneous steel fabrication with two (2) coats of red oxide primer. The finish shade shall be with two (2) coats of synthetic enamel paint of battle ship grey IS shade # 632) unless any other shade is specified.

2.08.00 Foundation & Civil Works

2.08.01 Equipment foundations, equipment mounting structure foundation, panel foundations and other civil work will be provided by the Contractor.

2.08.02 The Contractor shall check these foundations before commencement of erection to ensure their suitability.

2.08.03 All final adjustment of foundation levels, chipping and dressing of foundation surfaces, setting and grouting of anchor bolts, sills, inserts and fastening devices shall be carried out by the contractor including minor modification of civil work as may be required for erection.

2.09.00 Cleaning up of Work Site

2.09.01 The Contractor shall, from time to time, remove all rubbish resulting from execution of his work. No materials shall be stored or placed on passage or drive ways.

2.09.02 Upon completion of work, the Contractor shall remove all rubbish, tools, scaffoldings, temporary structures and surplus materials etc. to leave the premises clean and fit for use.

3.00.00 TESTS

3.01.00 Site Tests

3.01.01 Contractor shall thoroughly test and meggar all cables, wires and equipment to prove the same are free from ground and short circuit after erection and installation at site.

3.01.02 If any ground or short circuit is found, the fault shall be rectified or the cable and/or equipment replaced.

3.01.03 All equipment shall be demonstrated to operate in accordance with the requirements of this specification.

3.01.04 All equipment shall be subject to High Potential test.

3.01.05 All protective relays shall be checked for correctness of operations.

3.01.06 All current transformers shall be subjected to Primary Injection test.

3.01.07 Generator Bus-duct Polarisation Index (P.I. value) shall be measured.

3.02.00 Testing Equipment

3.02.01 The major testing equipment that are required to be provided by the Contractor are listed below:

a) Insulation Tester :i) Power Operated Megger -1 kV and 10 kV grade
ii) Hand Operated Megger – 1 kV grade

b) Hand driven Earth Resistance Meggar, range 0 - 1/3/30 Ohms.

c) High Potential Testing Set - roller mounted type for LV, HV & EHV equipment

d) Tong testers of suitable ranges (mA range to 200A)

e) Contact resistance measuring set for micro-Ohms.

f) Torque wrench of various sizes

g) Multi-meters, test lamp, field telephone with buzzer set, spirit level, different gauges etc.

h) Insulating oil testing set of range 0 - 100 kV.

i) Stream line filter for transformer.

j) Current Transformer for primary injection set upto 100A

k) Relay testing and checking bench

l) Microprocessor based three phase secondary current injection set (equivalent Omicron Kit), Tan-delta test kit for Transformer, TTR test Kit three channels.

3.02.02 Other test equipment as required will be arranged by the Contractor.

3.03.00 Pre-commissioning Tests at Site

3.03.01 Each equipment and accessory shall be tested by the contractor after completion of his erection work with an advance notice to the OE concerned so that he may witness the same also.

3.03.02 Test result of any installation or equipment or its parts, if considered unsatisfactory to the OE, the concerned installation/equipment and its accessories shall be properly rectified and tested again at his own cost by the Contractor to the satisfaction of the OE.

3.03.03 Site tests to be carried out by the contractor on completion of installation/erection of equipment are broadly listed in Annexure-A for ready reference by contractor.

3.03.04 The major testing equipment which will be necessary for carrying out pre-commissioning tests at site are already listed in this specification.

4.00.00 DRAWINGS, DATA AND MANUALS

4.01.00 To be submitted with the Bid

4.01.01 Tentative schedule of erection.

4.01.02 Tentative schedule of mobilization of men and materials.

4.02.00 To be submitted after Award of Contract

4.02.01 Schedule of erection for Owner's approval

4.02.02 Schedule of mobilization of men and materials for Owner's approval.

Annexure-A

SCHEDULE OF PRE-COMMISSIONING TESTS OF ELECTRICAL EQUIPMENT

1.0 Transformers

a) Drying out by using streamline filter, centrifuge and heater set.

b) Insulation resistance of oil in both main and OLTC chamber.

c) Insulation resistance of windings

d) Checking of Phase Sequence

e) Continuity Test

f) No load voltage ratio at all tap positions

g) Checking of vector group

h) Tap changer operation check (mechanical and electrical) including indication and alarm circuits.

i) Magnetizing current check at 415V, 3φ, 50 Hz supply for all the three phases.

j) Measurement of winding resistance

k) Cooler control, indication and alarm circuits

l) Breather (Check for silica gel)

m) Buchholz relay operation

n) Low oil level for main tank/OLTC chamber

o) Physical line connections as per phasing diagram

p) Neutral connection to earth effectively.

q) Calibration of different temperature indicators, relays and switches.

2.0 Circuit Breakers

a) Insulation resistance test on each pole by H.V. Meggar.

b) Insulation resistance test on control circuit.

c) Measurement of closing time & tripping time.

d) Checking of all joints for gas leakage in case of SF6 insulated breaker.

e) Measurement of contact resistance for all the three phases.

f) Checking the auxiliary circuits associated with circuit breaker.

g) Functional check of breaker operation electrically at 70% and 110% of rated D.C. supply voltage.

h) Checking of Interlocks provided in Control Circuits and tripping through simulated protective relay contacts.

i) Measurement of resistance of closing and tripping coils.

3.0 Lightning Arrester

a) Check for connections to ground and line.

b) Continuity check (in case of Metal Oxide Silicon type only).

c) Operation check of discharge counter.

4.0 Grounding

a) Continuity of grounding connection.

b) Testing of earth resistivity of Individual Electrode.

c) Testing of earth resistivity of the combined earthing system.

5.0 Switchgears

a) Physical checking of various parts/equipment/loose components to be mounted.

b) I.R. test on power circuit.

c) I.R. test on control circuit.

d) Measurement of resistance of the closing and tripping coils. Checking the close and trip operation at 70% and 100% of the rated auxiliary DC voltage.

e) Measurement of Insulation Resistance of Bus-bar System.

f) Measurement of control resistance (in micro-ohms) for all the three phase of circuit breaker.

g) Measurement of I.R. of control circuit.

h) Functional check of circuit components.

i) Continuity check of different circuits.

j) Calibration test of Relays and Meters.

k) Space heater operation

l) Annunciations

m) High Voltage test on Bus & Breaker cubicle on HV/MV Switchgear.

n) Primary and secondary current injection /PT injection.

o) Auto/Manual changeover.

6.0 MCC/Distribution Board / Panels

a) Physical checking of various parts/connections.
b) Measurement of I. R. of bus-bar system.
c) Measurement of I.R. of control circuit.
d) Functional check of circuit components.
e) Checking of overload relay setting & other protective devices.
f) Primary and secondary current injection /PT injection.
g) Auto/Manual changeover.
h) Continuity check of different circuits.
i) Calibration test of Relays, O/L relays and Meters.
j) Space heater operation
k) Annunciations

7.0 Battery

a) Physical checking of various parts/connections/loose components to be mounted.
a) Acid filling, charging/discharging cycles.
c) Checking of electrolyte position in each cell.
b) Checking of polarity, voltage, specific gravity, temperature etc.

8.0 Battery Charger

a) Insulation resistance test.
b) Test on transformer (I.R., voltage ratio).
c) Automatic voltage regulator & annunciator operation & testing.
d) Load test.
e) Functional check of battery charger.
f) Calibration test of relays and meters of battery charger.
g) Space heater operation check.
h) Annunciations.

9.0 Motor

a) Insulation test of winding by Meggar.
b) Proper direction of rotation.
c) RTD, BTD operation.

10.0 Neutral Grounding Resistor

a) Insulation resistance test.
b) Ohmic value check.

11.0 Relays & Meters

a) Calibration test.
b) Operation/Performance test.

12.0 Disconnecting Switch

a) Insulation Resistance test on each pole by H.V. Meggar.
b) Insulation Resistance test on control circuit.
c) Measurement of contact resistance for all the three phases.
d) Checking the auxiliary circuits associated with Disconnect Switch.
e) Functional check of Disconnecting Switch operations electrically at 70% and 110% of rated D.C. Supply voltage.
f) Manual checking of operations (close - open) by handle for both main and earthing switches.
g) Checking of interlocks (mechanical and electrical) for both main switch and earthing switch.

13.0 Current Transformer

a) Insulation Resistance test by Meggar on each winding to earth and between windings.
b) Checking of all ratios on all cores by primary injection set.
c) Polarity check on each winding.
d) Continuity test
e) Check for connection to correct taps.
f) Oil level check

14.0 Potential Transformer

a) Checking of voltage ratios on all windings.
b) Polarity checking on each winding.

c) Insulation resistance test by Meggar on each winding to earth and between windings.

d) Check for connection to correct taps.

e) Oil level check

15.0 UPS

a) Physical checking of various parts/connections/loose components to be mounted.

b) Functional check of UPS.

c) Calibration test of relays and meters of UPS.

d) Load test

e) Space heater operation check.

f) Annunciations.

16.0 Generator, excitation System & Accessories

As per agreement with the manufacturer.

Note : Apart from the tests listed above and also as mentioned elsewhere in the specification, if any other tests are necessary as per relevant standards, CBIP recommendations, Code of Practice, manufacturer's recommendations etc., the same shall have to be carried out by the Contractor within the quoted price.

Annexure-B

DETAILS FOR CABLE TRAYS, FITTINGS & ACCESSORIES

1.00 Cable trays and fittings

1.01 Cable trays shall be of pre-fabricated ladder/perforated type sheet steel complete with matching fittings like brackets, elbows, bends, reducers, Tees, crosses, tray cover etc. and hardware like bolts, nuts, washers, GI straps, hook etc.as required. Cable trays shall be ladder type for power and control cables , and perforated type for instrumentation cables.

1.02 Cable trays, fittings and accessories shall be factory-fabricated out of rolled mild steel sheets and hot dip galvanized as per relevant IS.

1.03 Cable trays shall be supplied in standard length of 2.5 meters and in standard width of 150mm, 300mm, 450mm and 600mm.

1.04 Mild steel sheets used for fabrication of cable trays and all fittings except the side coupler plates shall be of 2mm thickness. 3mm sheet shall be used for side coupler plates.

1.05 Perforated tray cover shall be provided for vertical cable shafts up to a height of 2.5 metres from floor level. It shall be bolted to the structural framework of the vertical raceway.

2.00 Galvanizing Requirement

2.01 Hot dip Galvanizing shall be uniform, clear, smooth and free from acid spots. Should the galvanizing of the samples be found defective, the entire batch of steel will have to be re-galvanized at Contractor's cost.

2.02 The amount of zinc deposited shall not be less than 610 gram per square meter of surface area and in addition the thickness of the zinc deposit at any spots whatsoever, shall not be less than 75 microns. The Owner reserves the right to measure the thickness of zinc deposit by Elcometer or any other instrument and reject any component, which shows thickness of zinc at any location to be less than 75 microns.

3.00 Support System for Cable Trays

3.01 Cable tray support system shall be pre-fabricated factory-galvanized similar or equivalent to “Unistrut” make.

3.02 Support system for cable trays shall consist of two components viz. main support channel and cantilever arm/bracket. The main support channel shall have provision for fixing cantilever arm either on one side or on both sides as per requirement.

3.03 The cable tray system shall be erected at site by assembling brackets, clamps, fittings with miscellaneous fasteners. Welding of any short will not be permitted.

3.04 Cable support system shall be able to withstand:

a) Weight of the cable tray
b) Weight of the cables
c) Point load of 75kg on each span

Factor of safety of minimum 1.5 shall be considered.

4.00 Tests

4.01 The Contractor shall perform all tests necessary to ensure that the material and workmanship conform to the relevant standards and that such tests are adequate to demonstrate that the equipment will comply with the requirement of this specification.

4.02 Deflection of the cable tray under the specified withstand loading condition shall be limited to 1/180th of span.

CABLING
NOTES & DETAILS

DWG. NO. 12A05-DWG-E-0400

FOR TENDER PURPOSE ONLY

12A05-DWG-E-0400 Sh.Cover 13.01.2017

NOTES:–

1. THE CABLING WORK SHALL BE DONE IN ACCORDANCE TO THE STIPULATION OF THE SPECIFICATION.

2. THE CABLING WORK SHALL COMPRISE OF THE FOLLOWING AND/OR AS STIPULATED IN THE SPECIFICATION:–

   - ON TRAY : LAYING, DRESSING, CLAMPING OF CABLES ON TRAY, FIXING OF CABLE TAG INCLUDING THE SUPPLY OF CABLE CLAMPS, CABLE TAGS AND FIXING HARDWARES.

   - BURIED : EXACAVATION OF EARTH, FILLING BY SAND, PROVIDING BRICK PARTITION, LAYING AND DRESSING OF CABLE, FIXING OF CABLE TAG, SAND COVERING FOLLOWED BY FIXING OF PRECAST COVER, BACKFILLING BY GOOD EARTH FOLLOWED BY COARSE EARTH INCLUDING THE SUPPLY OF CABLE TAG, SAND, BRICK, PRECAST COVER.

   - SHALLOW TRENCH : LAYING, DRESSING, FIXING OF CABLE TAG, FILLING WITH SAND AND FIXING OF BRICK COLUMN INCLUDING SUPPLY OF SAND, BRICK AND CABLE TAG.

   - DUCT BANK : PULLING OF CABLE AND FIXING OF CABLE TAG.

3. TERMINATION WORK SHALL BE DONE IN ACCORDANCE TO THE STIPULATION OF THE SPECIFICATION INCLUDING SUPPLY OF LUGS, GLANDS FOR CONTROL CABLE.

4. ARMOUR/SCREEN OF MULTI CORE CABLES SHALL BE GROUNDED AT BOTH END.

5. ARMOUR/SCREEN, IF ANY, OF SINGLE CORE CABLE SHALL BE GROUNDED ONLY AT SOURCE END.

6. ALL WALL/FLOOR OPENINGS FOR CABLE ENTRY SHALL BE SUITABLY SEALED WITH FIRE RATING OF 90 MINUTE AFTER CABLE ERECTION.

7. CLAMPING OF ADJACENT CABLES ON THE SAME RACK SHALL BE STAGGERED TO AVOID FOULING OF THE CLAMPING BOLTS.

FOR TENDER PURPOSE ONLY

DS	RD	RD	–	13.01.17
APPVD.	REVWD.	CHKD.	REV.	DATE

CABLING NOTES & DETAILS

WEST BENGAL POWER DEVELOPMENT CORPN. LTD.
WEST BENGAL, INDIA

SAGARDIGHI THERMAL POWER EXTENSION PROJECT
PHASE–III, UNITS # 5 (1 x 660 MW)

DEVELOPMENT CONSULTANTS PVT. LTD.
CONSULTING ENGINEERS

JOB NO. 12A05 | SCALE : NTS

DWG. NO. 12A05–DWG–E–0400 | REV. -

SHT. 01 OF 28

12A05-DWG-E-0400 Sh. 1 OF 28 13.01.2017

A4_DD (9–96) [210x297]

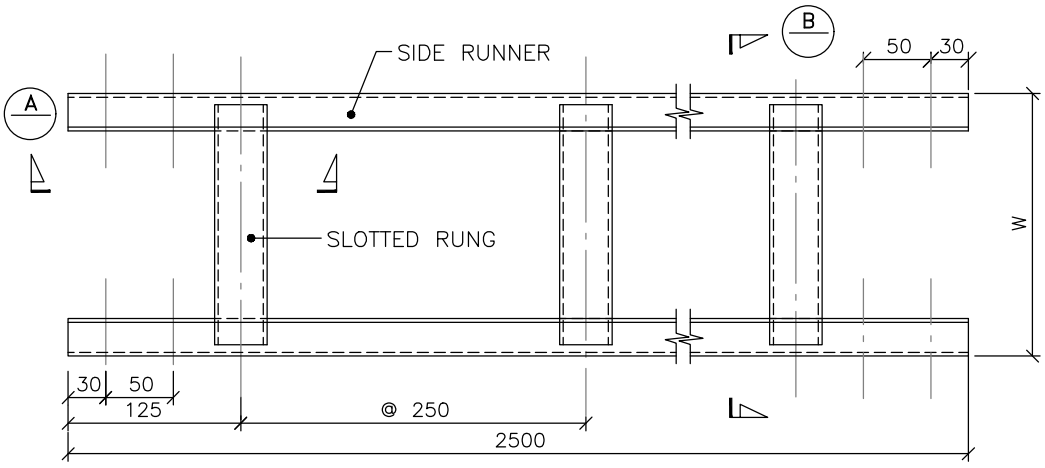

LADDER TYPE CABLE TRAY

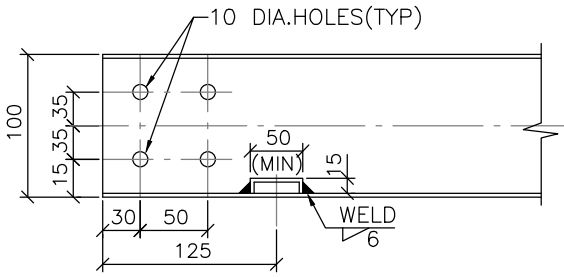

SEC – A

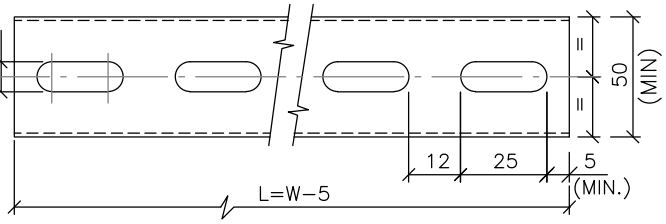

SLOTTED RUNG

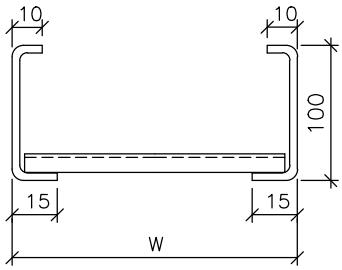

SEC – B

W	300	450	600
L	295	445	595

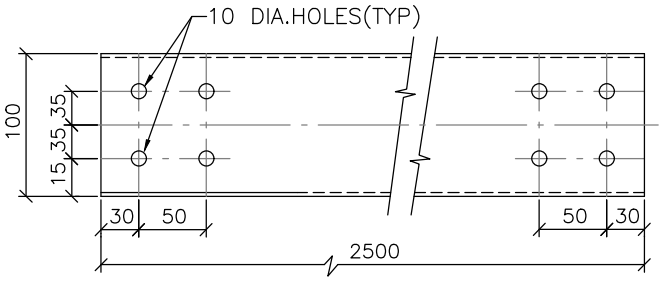

SIDE RUNNER

MATERIAL : M.S. SHEET 14 SWG.(2mm.THK.)
FINISH : HOT DIP GALVANISED

NOTE :–

1. ALL DIMENSIONS ARE IN MM.

FOR TENDER PURPOSE ONLY

DS	RD	RD	–	13.01.17
APPVD.	REVWD.	CHKD.	REV.	DATE

CABLING
NOTES & DETAILS

WEST BENGAL POWER DEVELOPMENT CORPN. LTD.
WEST BENGAL, INDIA

SAGARDIGHI THERMAL POWER EXTENSION PROJECT
PHASE–III, UNITS # 5 (1 x 660 MW)

DEVELOPMENT CONSULTANTS PVT. LTD.
CONSULTING ENGINEERS

JOB NO. 12A05 | SCALE : NTS

DWG. NO. 12A05–DWG–E–0400 | REV. -
SHT. 02 OF 28

12A05-DWG-E-0400 Sh. 2 OF 28 13.01.2017

A4_DD (9–96) [210x297]

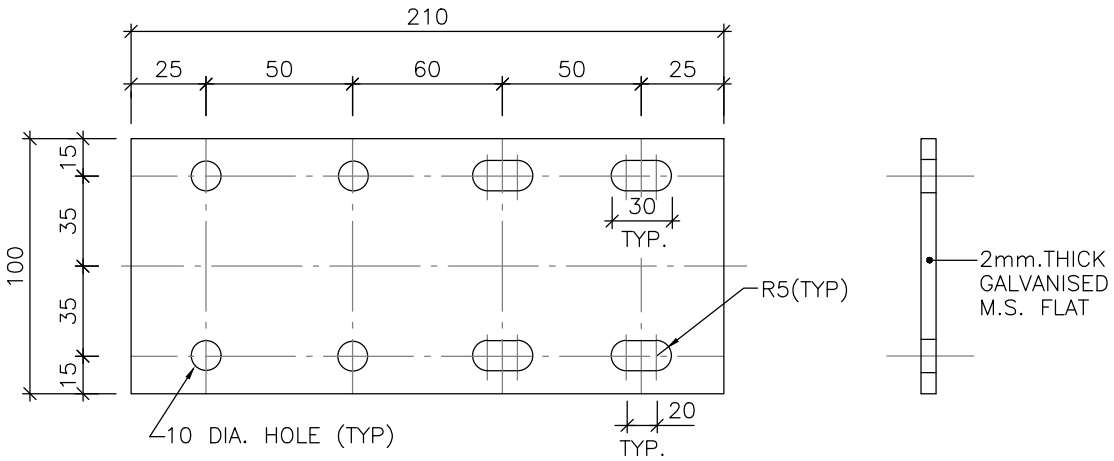

SIDE COUPLER PLATE

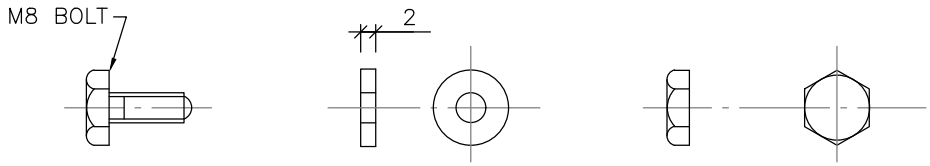

M8 BOLT, WASHER & NUT

(FOR CABLE TRAY JOINT)

NOTE :-

1. ALL DIMENSIONS ARE IN MM.

FOR TENDER PURPOSE ONLY

DS	RD	RD	–	13.01.17
APPVD.	REVWD.	CHKD.	REV.	DATE

CABLING
NOTES & DETAILS

WEST BENGAL POWER DEVELOPMENT CORPN. LTD.
WEST BENGAL, INDIA

SAGARDIGHI THERMAL POWER EXTENSION PROJECT
PHASE–III, UNITS # 5 (1 x 660 MW)

DEVELOPMENT CONSULTANTS PVT. LTD.
CONSULTING ENGINEERS

JOB NO. 12A05 | SCALE : NTS

DWG. NO. 12A05–DWG–E–0400 | REV. -
SHT. 03 OF 28

12A05-DWG-E-0400 Sh. 3 OF 28 13.01.2017

A4_DD (9–96) [210x297]

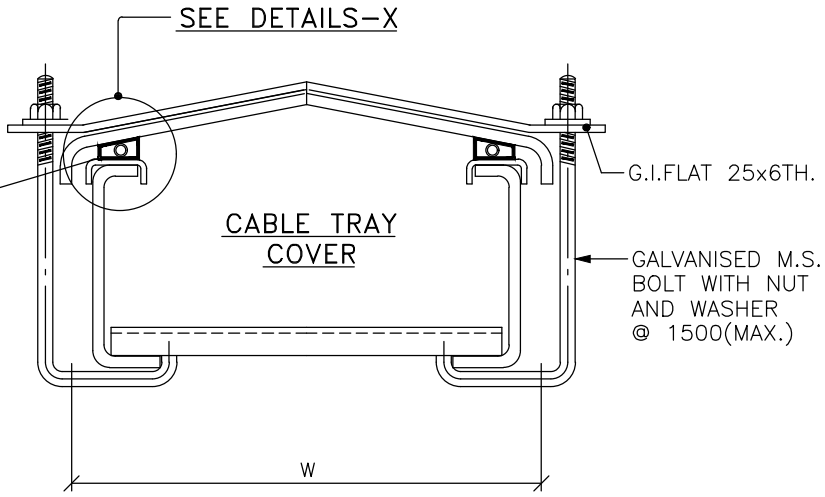

COVER FIXING(TYP.)

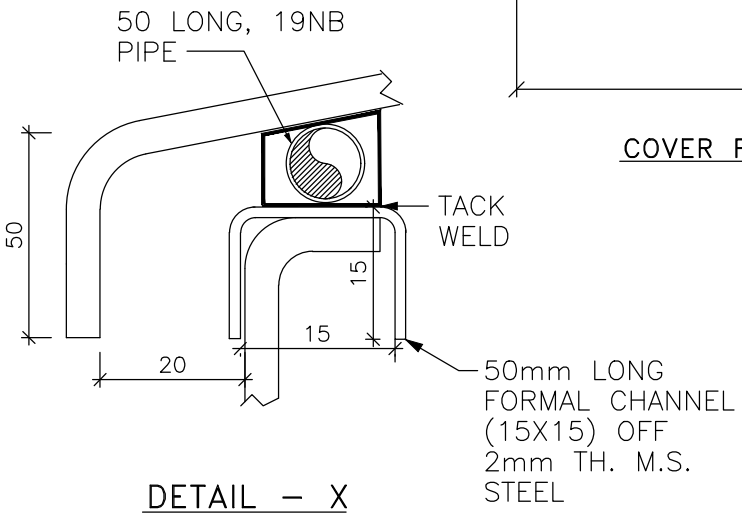

DETAIL – X

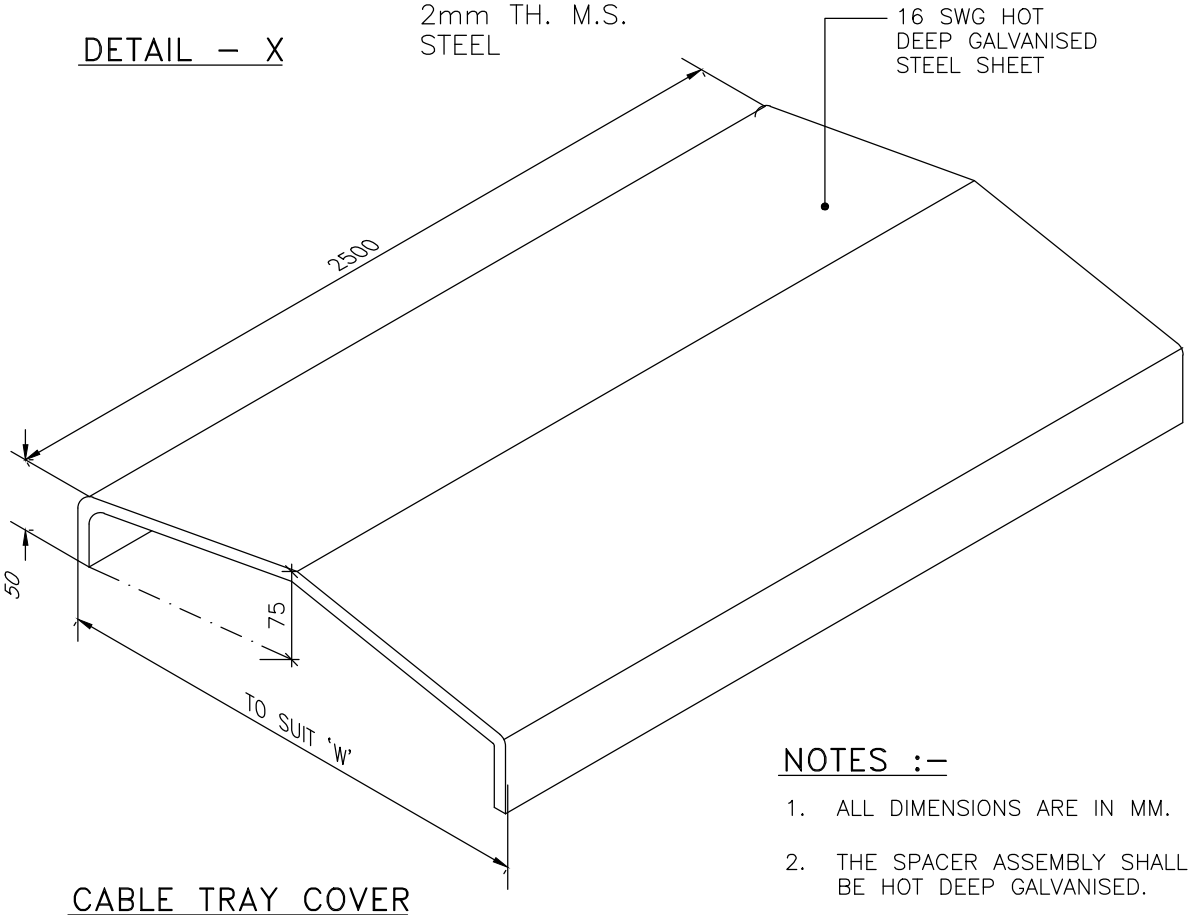

CABLE TRAY COVER

NOTES :–

1. ALL DIMENSIONS ARE IN MM.
2. THE SPACER ASSEMBLY SHALL BE HOT DEEP GALVANISED.

FOR TENDER PURPOSE ONLY

DS	RD	RD	–	13.01.17
APPVD.	REVWD.	CHKD.	REV.	DATE

CABLING
NOTES & DETAILS

WEST BENGAL POWER DEVELOPMENT CORPN. LTD.
WEST BENGAL, INDIA

SAGARDIGHI THERMAL POWER EXTENSION PROJECT
PHASE–III, UNITS # 5 (1 x 660 MW)

DEVELOPMENT CONSULTANTS PVT. LTD.
CONSULTING ENGINEERS

JOB NO. 12A05 | SCALE : NTS

DWG. NO. 12A05–DWG–E–0400 | REV. -
SHT. 04 OF 28

12A05-DWG-E-0400 Sh. 4 OF 28 13.01.2017

A4_DD (9–96) [210x297]

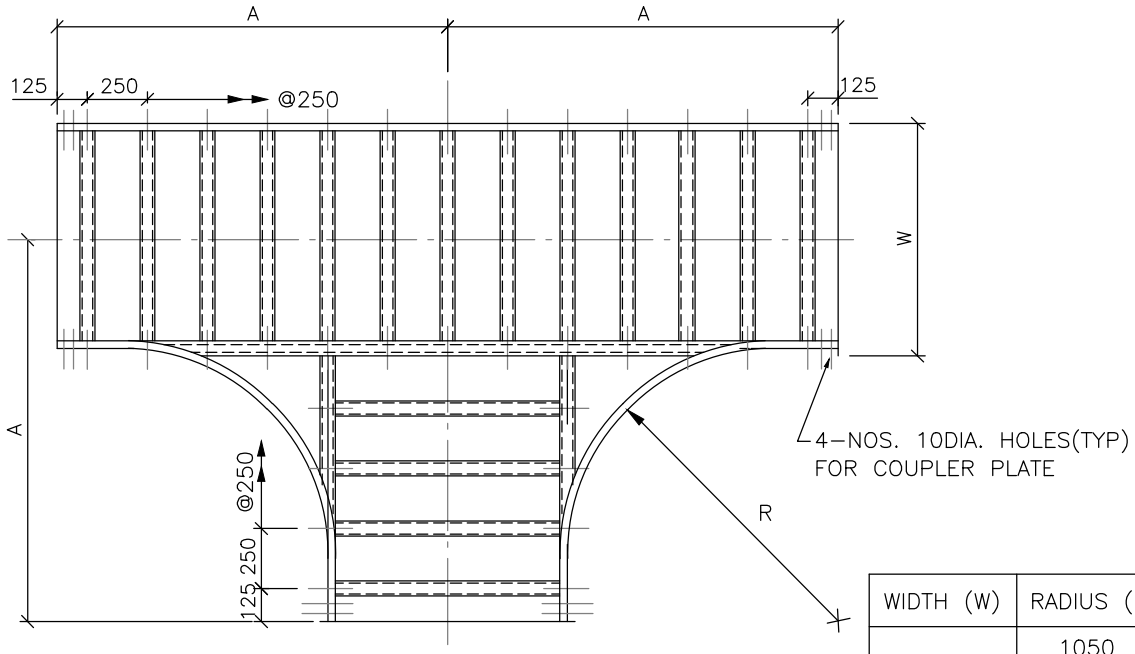

PLAN
HORIZONTAL TEE

WIDTH (W)	RADIUS (R)	A
600	1050	1475
	600	1025
	450	875
	300	725
450	1050	1400
	600	950
	450	800
	300	650
300	1050	1325
	600	875
	450	725
	300	575

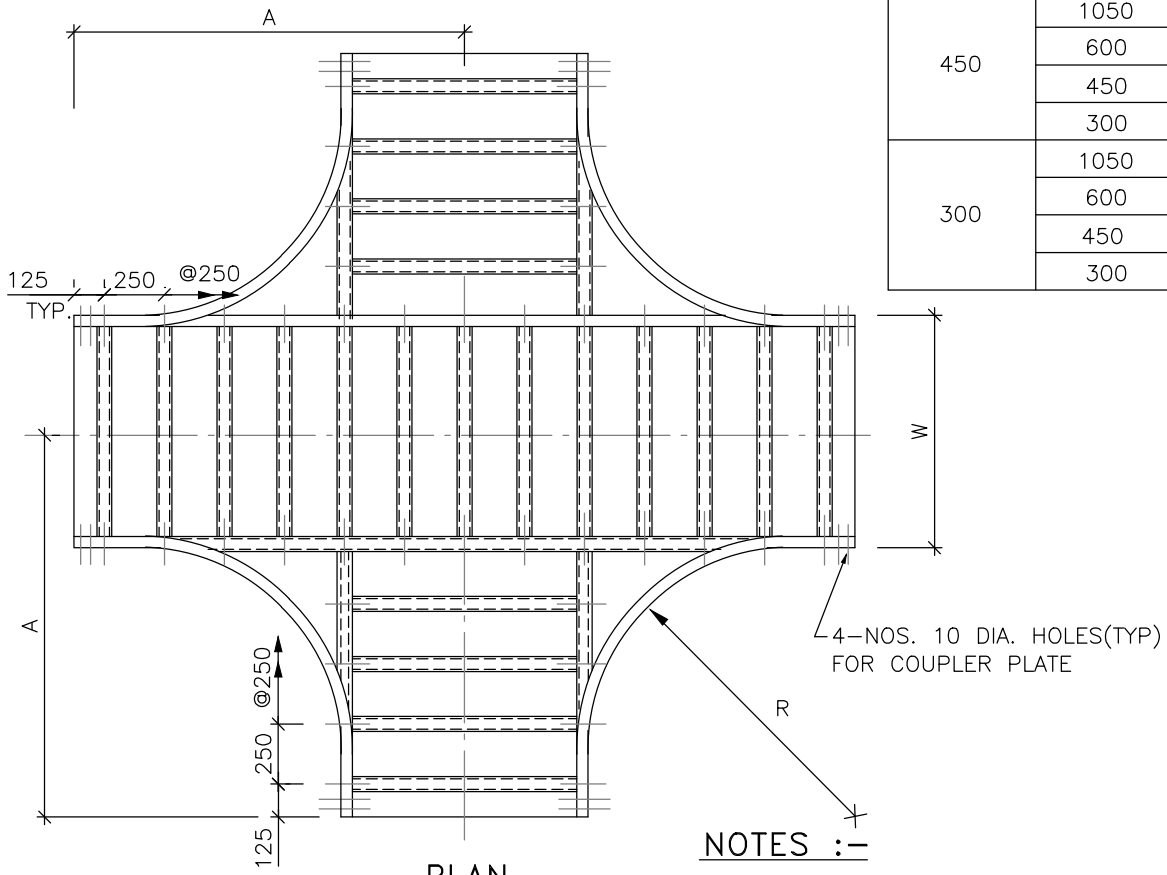

PLAN
HORIZONTAL CROSS

NOTES :-

1. ALL DIMENSIONS ARE IN MM.
2. FOR MULTITIER CABLE TRAY, THE BENDING RADIUS AT THE BENDS SHALL BE SAME FOR ALL TRAYS AND THIS RADIUS SHALL BE AS PER THE RECOMMENDED BENDING RADIUS OF LARGEST CABLE IN THE ROUTE.

FOR TENDER PURPOSE ONLY

DS	RD	RD	–	13.01.17
APPVD.	REVWD.	CHKD.	REV.	DATE

CABLING
NOTES & DETAILS

WEST BENGAL POWER DEVELOPMENT CORPN. LTD.
WEST BENGAL, INDIA

SAGARDIGHI THERMAL POWER EXTENSION PROJECT
PHASE-III, UNITS # 5 (1 x 660 MW)

DEVELOPMENT CONSULTANTS PVT. LTD.
CONSULTING ENGINEERS

JOB NO. 12A05 | SCALE : NTS

DWG. NO. 12A05-DWG-E-0400 | REV. -
SHT. 05 OF 28

12A05-DWG-E-0400 Sh. 5 OF 28 13.01.2017

A4_DD (9-96) [210x297]

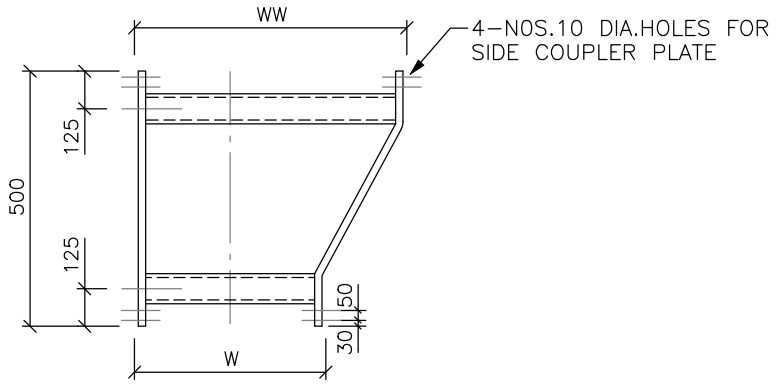

PLAN
LEFT HAND REDUCER

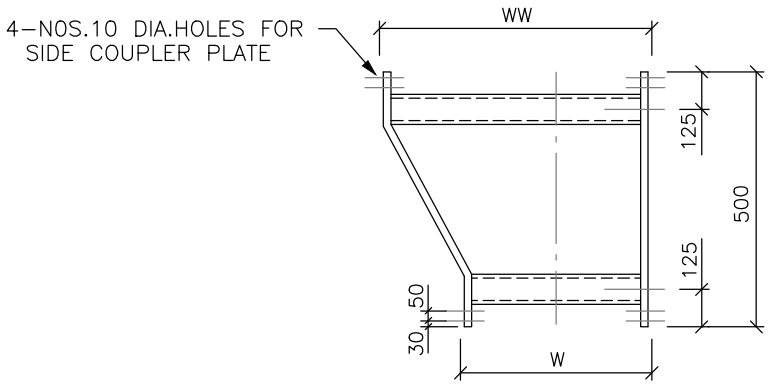

PLAN
RIGHT HAND REDUCER

WIDTH	WW	600	600	450
	W	450	300	300

NOTE :-

1. ALL DIMENSIONS ARE IN MM.

FOR TENDER PURPOSE ONLY

DS	RD	RD	-	13.01.17
APPVD.	REVWD.	CHKD.	REV.	DATE

CABLING
NOTES & DETAILS

WEST BENGAL POWER DEVELOPMENT CORPN. LTD.
WEST BENGAL, INDIA

SAGARDIGHI THERMAL POWER EXTENSION PROJECT
PHASE-III, UNITS # 5 (1 x 660 MW)

DEVELOPMENT CONSULTANTS PVT. LTD.
CONSULTING ENGINEERS

JOB NO. 12A05 | SCALE : NTS

DWG. NO. 12A05-DWG-E-0400 SHT. 06 OF 28 | REV. -

12A05-DWG-E-0400 Sh. 6 OF 28 13.01.2017

A4_DD (9-96) [210x297]

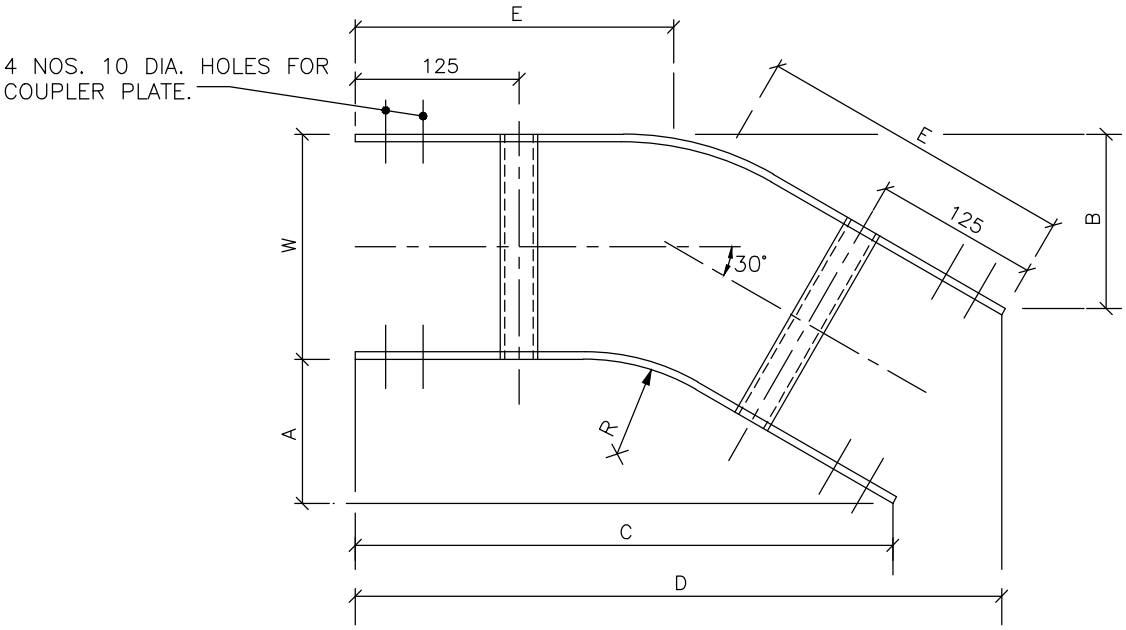

PLAN
30° HORIZONTAL ELBOW

WIDTH (W)	RADIUS (R)	A	B	C	D	E
600	1050	205	285	755	1055	485
	600	145	225	530	830	365
	450	125	205	455	755	325
	300	105	185	380	680	285
450	1050	205	265	755	980	465
	600	145	205	530	755	345
	450	125	185	455	680	305
	300	105	165	380	605	265
300	1050	205	245	755	905	445
	600	145	185	530	680	325
	450	125	165	455	605	285
	300	105	145	380	530	245

NOTE :–

1. ALL DIMENSIONS ARE IN MM.

FOR TENDER PURPOSE ONLY

DS	RD	RD	–	13.01.17
APPVD.	REVWD.	CHKD.	REV.	DATE

CABLING
NOTES & DETAILS

WEST BENGAL POWER DEVELOPMENT CORPN. LTD.
WEST BENGAL, INDIA

SAGARDIGHI THERMAL POWER EXTENSION PROJECT
PHASE–III, UNITS # 5 (1 x 660 MW)

DEVELOPMENT CONSULTANTS PVT. LTD.
CONSULTING ENGINEERS

JOB NO. 12A05 | SCALE : NTS

DWG. NO. 12A05–DWG–E–0400 SHT. 07 OF 28 | REV. -

12A05-DWG-E-0400 Sh. 7 OF 28 13.01.2017

A4_DD (9–96) [210x297]

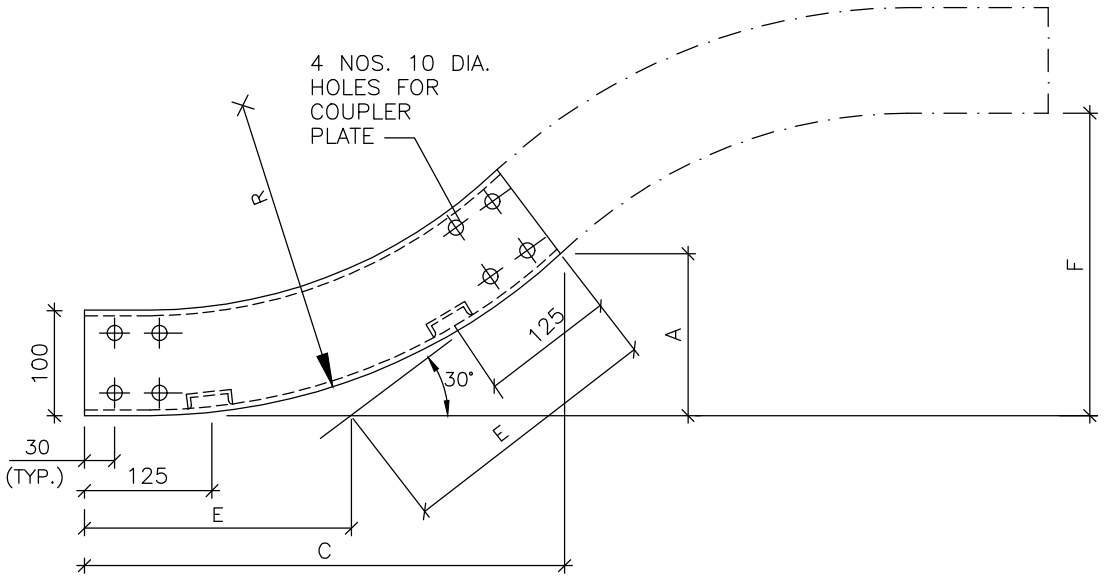

ELEVATION
30° VERTICAL ELBOW (INSIDE)

WIDTH(W)	RADIUS(R)	A	C	E	F
600 450 & 300	1050	205	760	410	410
	600	145	535	290	290
	450	125	460	250	250
	300	105	385	210	210

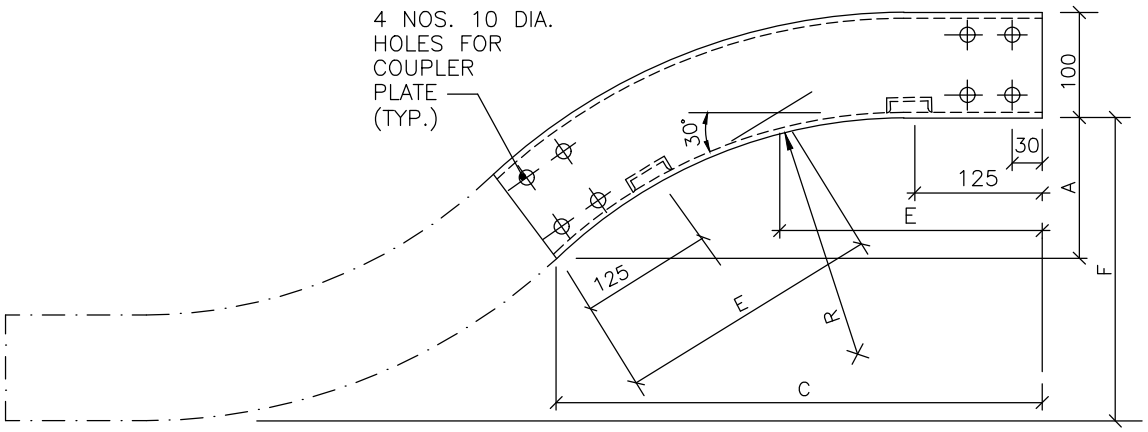

ELEVATION
30° VERTICAL ELBOW (OUTSIDE)

NOTE :-

1. ALL DIMENSIONS ARE IN MM.

FOR TENDER PURPOSE ONLY

DS	RD	RD	–	13.01.17
APPVD.	REVWD.	CHKD.	REV.	DATE

CABLING
NOTES & DETAILS

WEST BENGAL POWER DEVELOPMENT CORPN. LTD.
WEST BENGAL, INDIA

SAGARDIGHI THERMAL POWER EXTENSION PROJECT
PHASE–III, UNITS # 5 (1 x 660 MW)

DEVELOPMENT CONSULTANTS PVT. LTD.
CONSULTING ENGINEERS

JOB NO. 12A05 | SCALE : NTS

DWG. NO. 12A05–DWG–E–0400 SHT. 08 OF 28 | REV. -

12A05-DWG-E-0400 Sh. 8 OF 28 13.01.2017

A4_DD (9–96) [210x297]

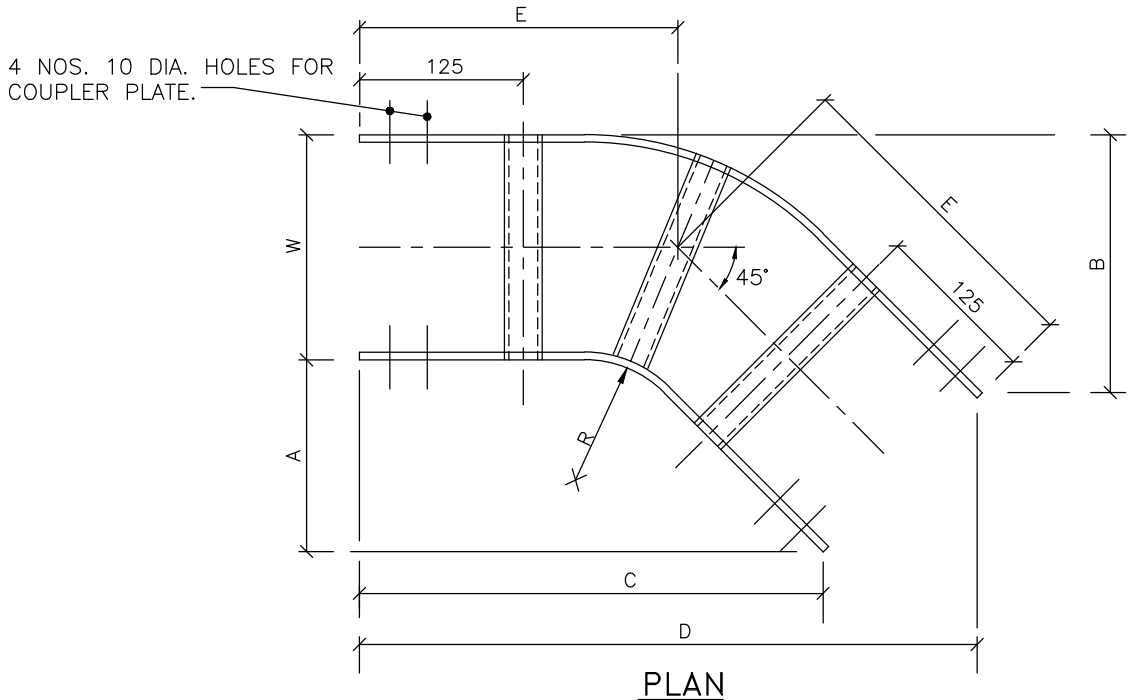

PLAN
45° HORIZONTAL ELBOW

WIDTH (W)	RADIUS (R)	A	B	C	D	E
600	1050	395	570	955	1380	685
	600	265	440	640	1065	535
	450	220	395	530	955	470
	300	175	350	425	850	410
450	1050	395	530	955	1275	690
	600	265	395	640	955	500
	450	220	350	530	850	440
	300	175	310	425	745	390
300	1050	395	485	955	1165	655
	600	265	350	640	850	470
	450	220	310	530	745	410
	300	175	265	425	635	345

NOTE :-

1. ALL DIMENSIONS ARE IN MM.

FOR TENDER PURPOSE ONLY

DS	RD	RD	–	13.01.17
APPVD.	REVWD.	CHKD.	REV.	DATE

CABLING
NOTES & DETAILS

WEST BENGAL POWER DEVELOPMENT CORPN. LTD.
WEST BENGAL, INDIA

SAGARDIGHI THERMAL POWER EXTENSION PROJECT
PHASE-III, UNITS # 5 (1 x 660 MW)

DEVELOPMENT CONSULTANTS PVT. LTD.
CONSULTING ENGINEERS

JOB NO. 12A05 | SCALE : NTS

DWG. NO. 12A05-DWG-E-0400 | REV. -
SHT. 09 OF 28

12A05-DWG-E-0400 Sh. 9 OF 28 13.01.2017

A4_DD (9-96) [210x297]

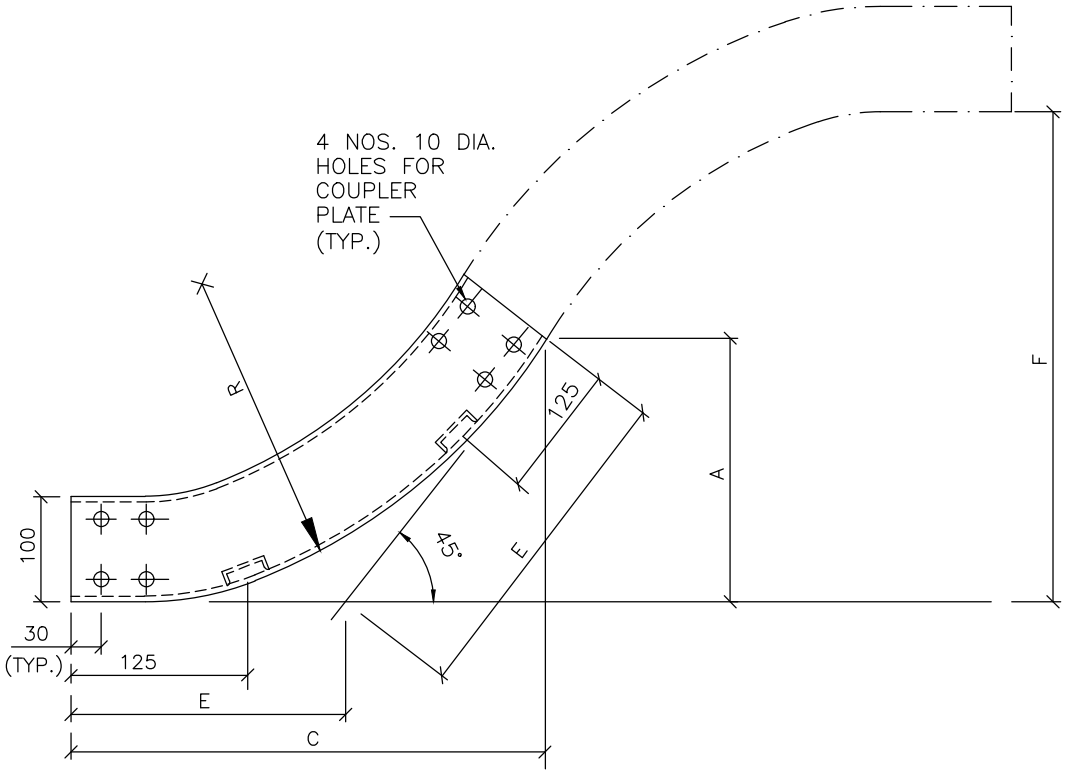

ELEVATION
45° VERTICAL ELBOW (INSIDE)

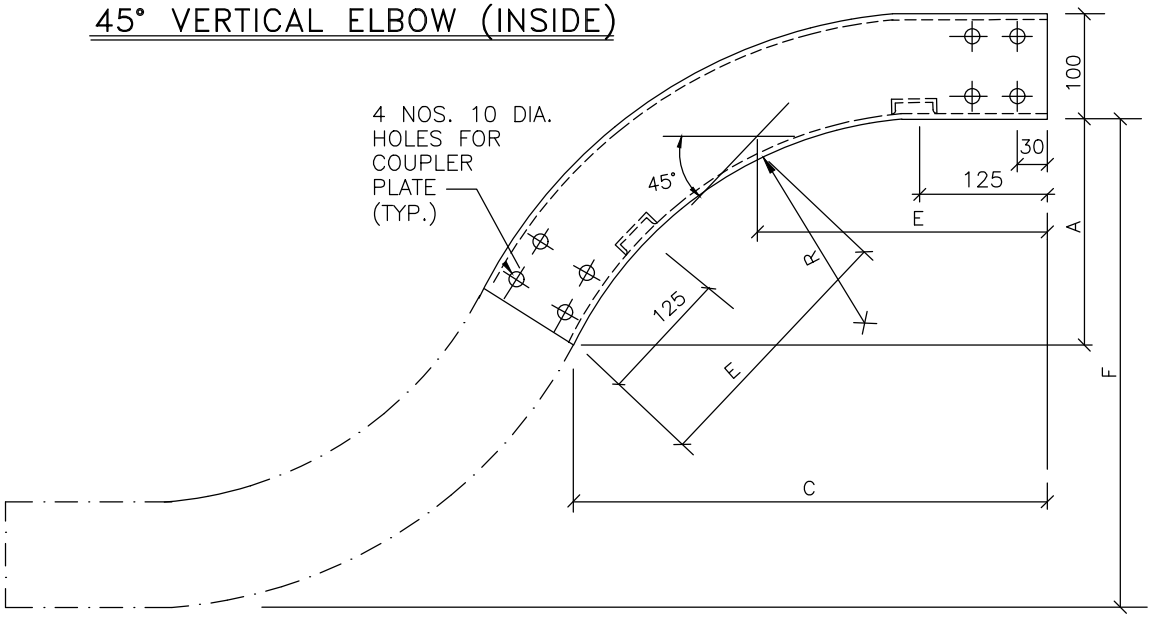

ELEVATION
45° VERTICAL ELBOW (OUTSIDE)

WIDTH(W)	RADIUS(R)	A	C	E	F
600 450 & 300	1050	395	955	560	790
	600	265	640	375	530
	450	220	530	310	440
	300	175	425	250	350

NOTE :-

1. ALL DIMENSIONS ARE IN MM.

FOR TENDER PURPOSE ONLY

DS	RD	RD	–	13.01.17
APPVD.	REVWD.	CHKD.	REV.	DATE

CABLING
NOTES & DETAILS

WEST BENGAL POWER DEVELOPMENT CORPN. LTD.
WEST BENGAL, INDIA

SAGARDIGHI THERMAL POWER EXTENSION PROJECT
PHASE-III, UNITS # 5 (1 x 660 MW)

DEVELOPMENT CONSULTANTS PVT. LTD.
CONSULTING ENGINEERS

JOB NO. 12A05 | SCALE : NTS

DWG. NO. 12A05-DWG-E-0400 | REV. -
SHT. 10 OF 28

12A05-DWG-E-0400 Sh. 10 OF 28 13.01.2017

A4_DD (9-96) [210x297]

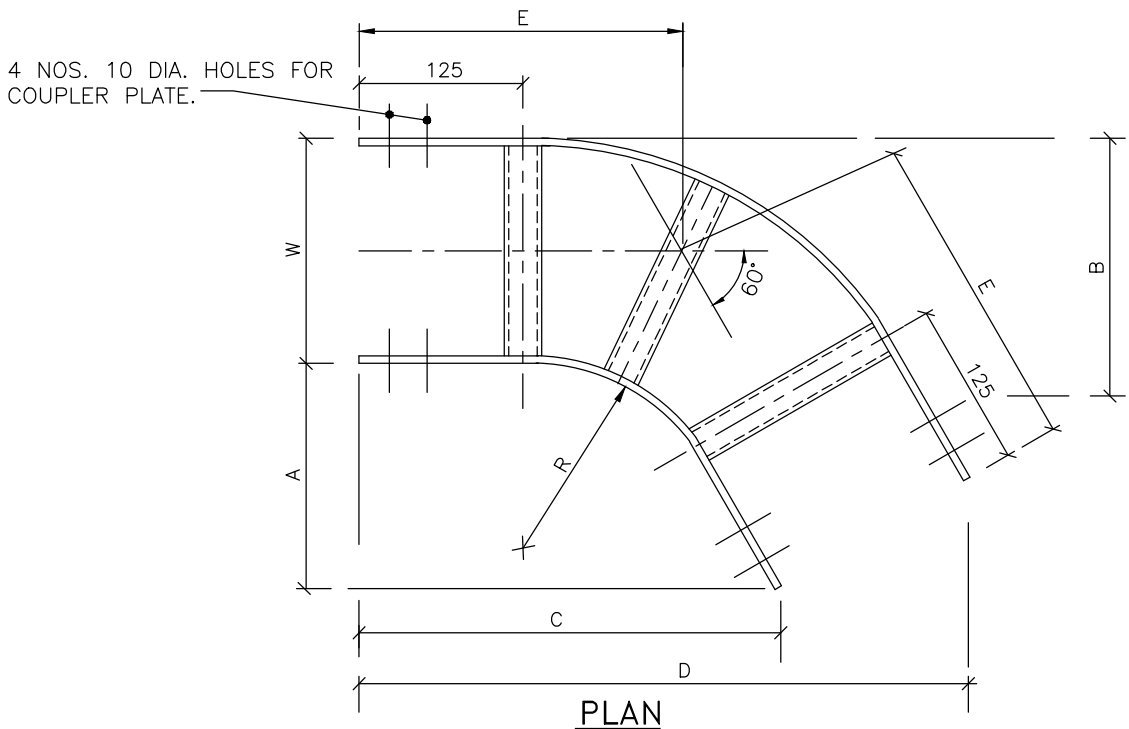

PLAN
60° HORIZONTAL ELBOW

WIDTH (W)	RADIUS (R)	A	B	C	D	E
600	1050	635	935	1095	1615	905
	600	410	710	705	1225	645
	450	335	635	575	1095	560
	300	250	550	450	965	470
450	1050	635	860	1095	1485	860
	600	410	635	705	1095	600
	450	335	550	575	965	515
	300	250	485	450	835	425
300	1050	635	785	1095	1355	815
	600	410	560	705	965	555
	450	335	485	575	835	470
	300	250	410	450	705	385

NOTE :-

1. ALL DIMENSIONS ARE IN MM.

FOR TENDER PURPOSE ONLY

DS	RD	RD	–	13.01.17
APPVD.	REVWD.	CHKD.	REV.	DATE

CABLING
NOTES & DETAILS

WEST BENGAL POWER DEVELOPMENT CORPN. LTD.
WEST BENGAL, INDIA

SAGARDIGHI THERMAL POWER EXTENSION PROJECT
PHASE–III, UNITS # 5 (1 x 660 MW)

DEVELOPMENT CONSULTANTS PVT. LTD.
CONSULTING ENGINEERS

JOB NO. 12A05 | SCALE : NTS

DWG. NO. 12A05–DWG–E–0400 | REV. -
SHT. 11 OF 28

12A05-DWG-E-0400 Sh. 11 OF 28 13.01.2017

A4_DD (9–96) [210x297]

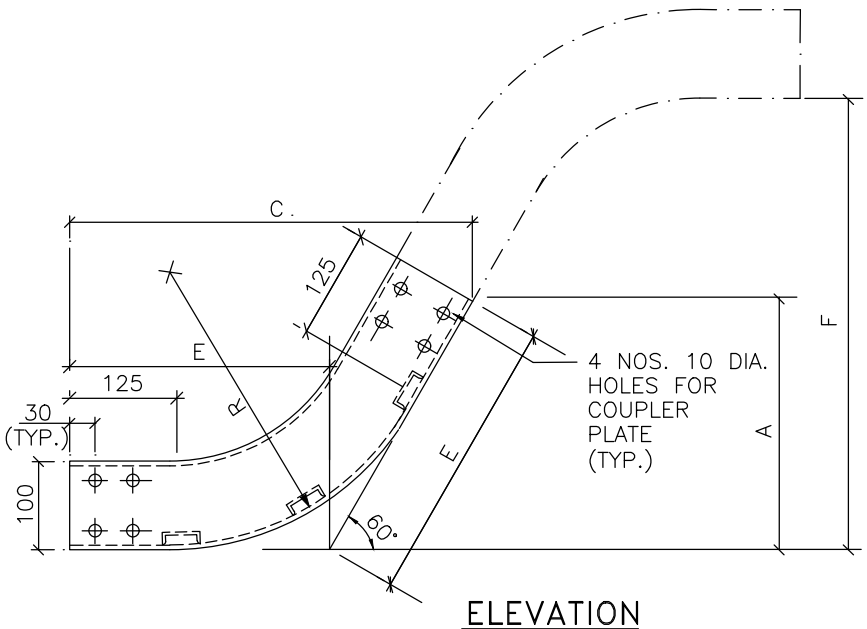

ELEVATION

60° VERTICAL ELBOW (INSIDE)

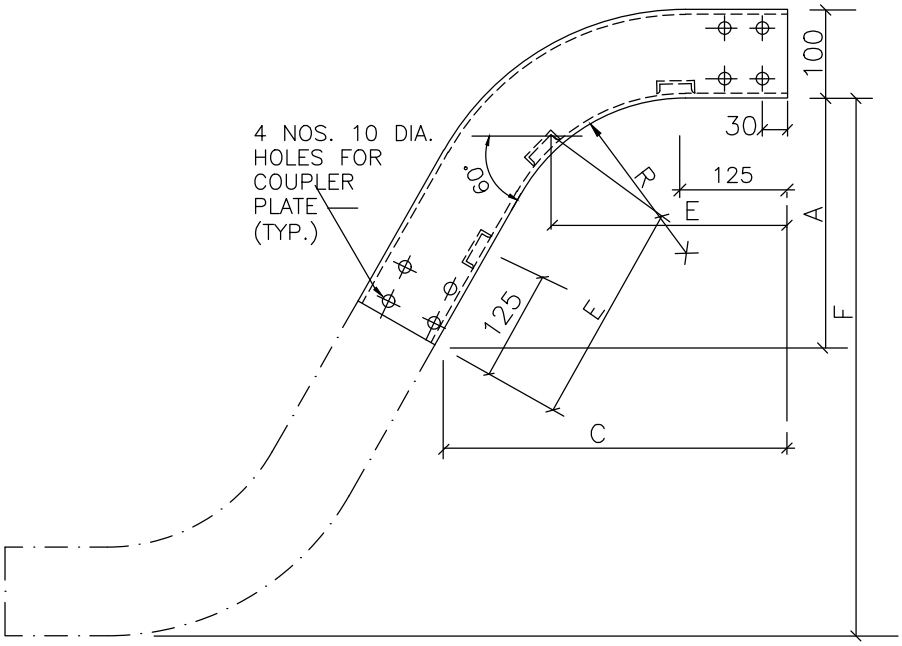

ELEVATION

60° VERTICAL ELBOW (OUTSIDE)

WIDTH(W)	RADIUS(R)	A	C	E	F
600 450 & 300	1050	635	1095	730	1270
	600	410	705	470	820
	450	335	575	385	670
	300	260	450	300	520

NOTE :-

1. ALL DIMENSIONS ARE IN MM.

FOR TENDER PURPOSE ONLY

DS	RD	RD	–	13.01.17
APPVD.	REVWD.	CHKD.	REV.	DATE

CABLING
NOTES & DETAILS

WEST BENGAL POWER DEVELOPMENT CORPN. LTD.
WEST BENGAL, INDIA

SAGARDIGHI THERMAL POWER EXTENSION PROJECT
PHASE-III, UNITS # 5 (1 x 660 MW)

DEVELOPMENT CONSULTANTS PVT. LTD.
CONSULTING ENGINEERS

JOB NO. 12A05 | SCALE : NTS

DWG. NO. 12A05-DWG-E-0400 | REV. -
SHT. 12 OF 28

12A05-DWG-E-0400 Sh. 12 OF 28 13.01.2017

A4_DD (9-96) [210x297]

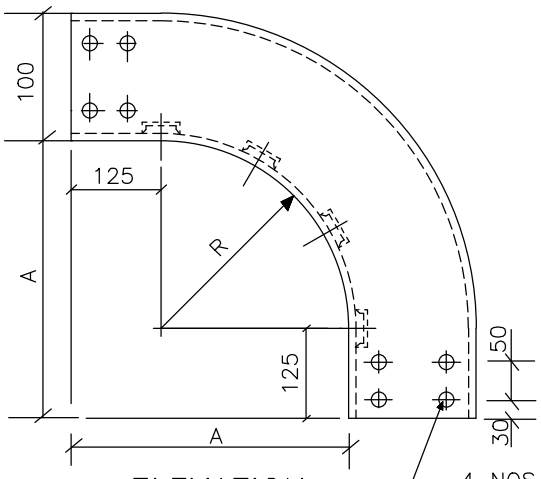

ELEVATION
90° VERTICAL ELBOW
(OUTSIDE)

4 NOS. 10 DIA. HOLES
FOR COUPLER PLATE

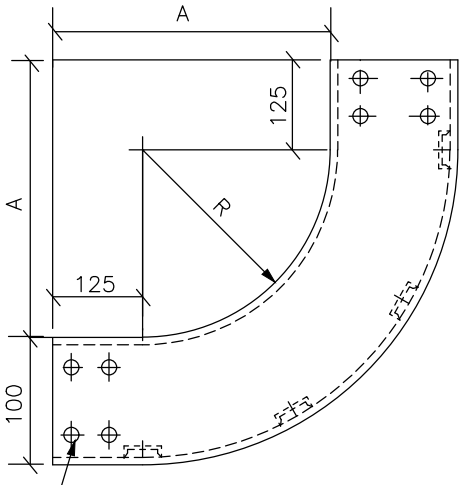

ELEVATION
90° VERTICAL ELBOW
(INSIDE)

VERTICAL ELBOW		
WIDTH (W)	RADIUS (R)	A
600 450 & 300	1050	1175
	600	725
	450	575
	300	425

HORIZONTAL ELBOW			
WIDTH (W)	RADIUS (R)	A	E
600	1050	1175	1475
	600	725	1025
	450	575	875
	300	425	725
450	1050	1175	1400
	600	725	950
	450	575	800
	300	425	650
300	1050	1175	1325
	600	725	875
	450	575	725
	300	425	575

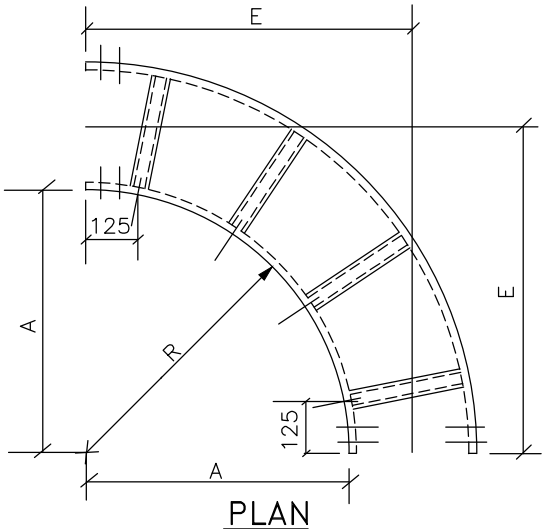

PLAN
90°HORIZONTAL ELBOW

NOTES :-

1. ALL DIMENSIONS ARE IN MM.
2. FOR MULTITIER CABLE TRAY, THE BENDING RADIUS AT THE BENDS SHALL BE SAME FOR ALL TRAYS AND THIS RADIUS SHALL BE AS PER THE RECOMMENDED BENDING RADIUS OF LARGEST CABLE IN THE ROUTE

FOR TENDER PURPOSE ONLY

DS	RD	RD	–	13.01.17
APPVD.	REVWD.	CHKD.	REV.	DATE

CABLING
NOTES & DETAILS

WEST BENGAL POWER DEVELOPMENT CORPN. LTD.
WEST BENGAL, INDIA

SAGARDIGHI THERMAL POWER EXTENSION PROJECT
PHASE-III, UNITS # 5 (1 x 660 MW)

DEVELOPMENT CONSULTANTS PVT. LTD.
CONSULTING ENGINEERS

JOB NO. 12A05 | SCALE : NTS

DWG. NO. 12A05-DWG-E-0400 | REV. -
SHT. 13 OF 28

12A05-DWG-E-0400 Sh. 13 OF 28 13.01.2017

A4_DD (9-96) [210x297]

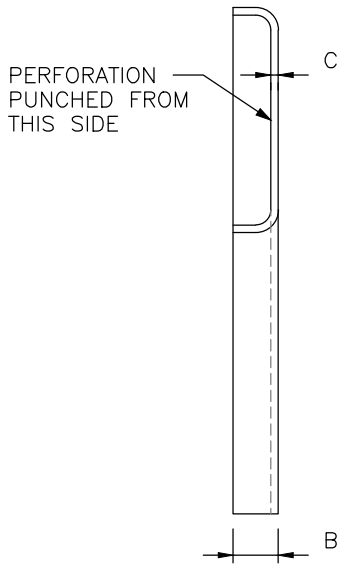

END ELEVATION

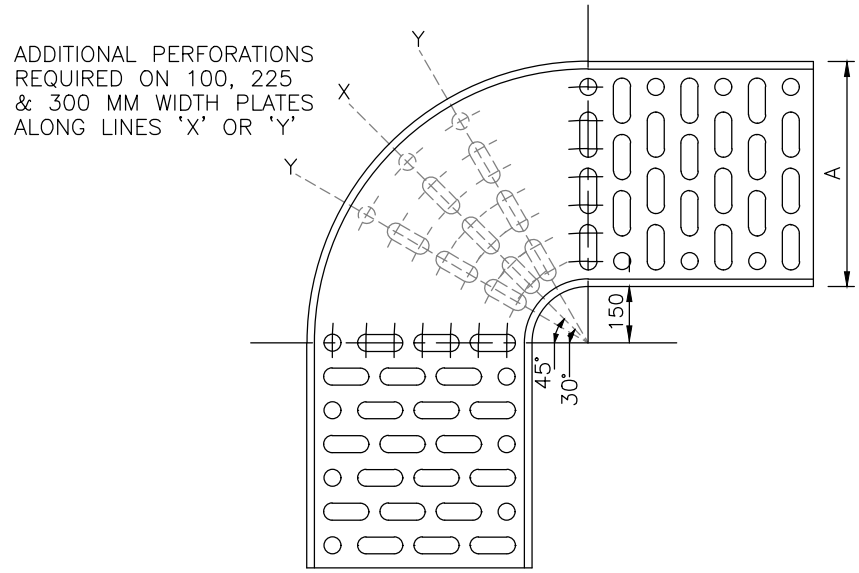

PLAN

90° HORIZONTAL ELBOW

DIMENSIONS IN MM	
WIDTH–A	DEPTH–B
100	50
150/225	
300	50

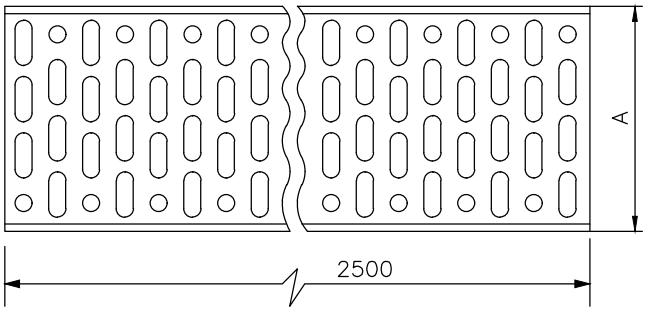

PLAN

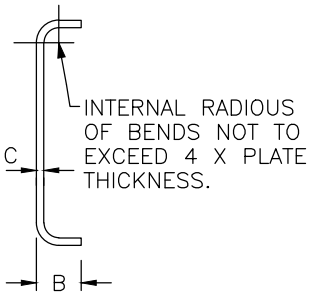

END ELEVATION

STRAIGHT LENGTH

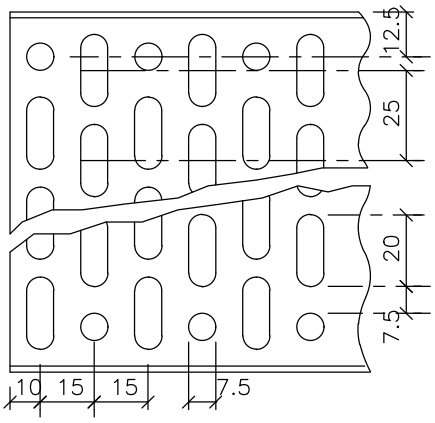

DETAILS OF PERFORATION

NOTES :

1. ALL CUTTING & FORMING OPERATIONS TO BE COMPLETED PRIOR TO GALVANIZING.
2. FINISHED TRAYS TO BE FREE FROM BURRS AND SHARP EDGES.
3. ALL DIMENSIONS ARE IN MM.

PERFORATED TYPE CABLE TRAY

FOR TENDER PURPOSE ONLY

DS	RD	RD	–	13.01.17
APPVD.	REVWD.	CHKD.	REV.	DATE

CABLING
NOTES & DETAILS

WEST BENGAL POWER DEVELOPMENT CORPN. LTD.
WEST BENGAL, INDIA

SAGARDIGHI THERMAL POWER EXTENSION PROJECT
PHASE–III, UNITS # 5 (1 x 660 MW)

DEVELOPMENT CONSULTANTS PVT. LTD.
CONSULTING ENGINEERS

JOB NO. 12A05 | SCALE : NTS

DWG. NO. 12A05–DWG–E–0400 | REV. -
SHT. 14 OF 28

12A05-DWG-E-0400 Sh. 14 OF 28 13.01.2017

A4_DD (9–96) [210x297]

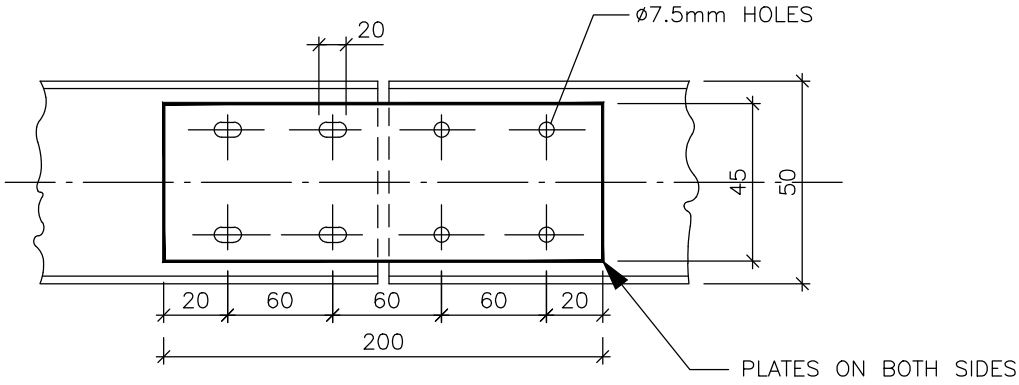

VIEW–A

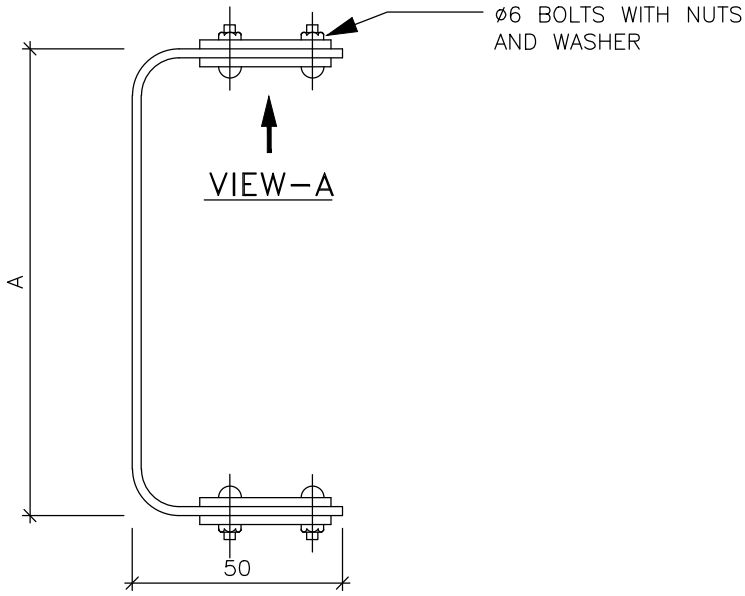

END ELEVATION

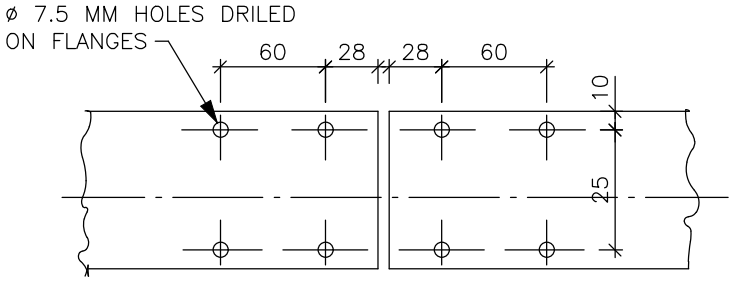

COUPLING PLATE

NOTES:–

1. COUPLING PLATES 2 MM THICK M.S.
2. ALL DIMENSIONS ARE IN MM.

PERFORATED TRAY JOINING BY COUPLING PLATES

FOR TENDER PURPOSE ONLY

DS	RD	RD	–	13.01.17
APPVD.	REVWD.	CHKD.	REV.	DATE

CABLING NOTES & DETAILS

WEST BENGAL POWER DEVELOPMENT CORPN. LTD.
WEST BENGAL, INDIA

SAGARDIGHI THERMAL POWER EXTENSION PROJECT
PHASE–III, UNITS # 5 (1 x 660 MW)

DEVELOPMENT CONSULTANTS PVT. LTD.
CONSULTING ENGINEERS

JOB NO. 12A05 | SCALE : NTS

DWG. NO. 12A05–DWG–E–0400 SHT. 15 OF 28 | REV. -

12A05-DWG-E-0400 Sh. 15 OF 28 13.01.2017

A4_DD (9–96) [210x297]

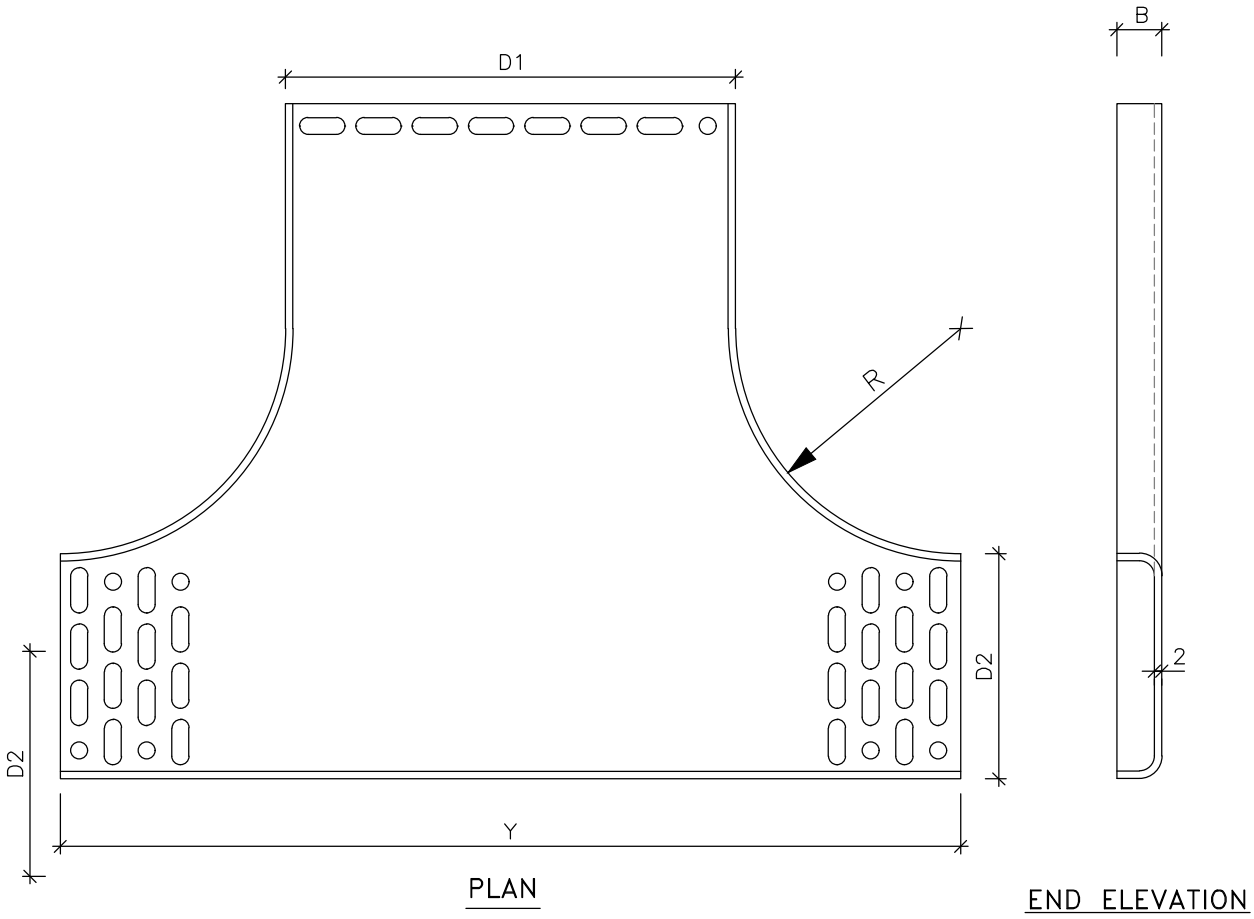

HORIZONTAL TEE

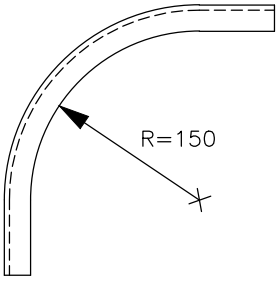

VERTICAL ELBOW (90°)

TYPE	DIMENSIONS IN MM				
	D1	D2	B	R	Y
A	225	100	50	150	500
B	300	150	50	200	600

PERFORATED TRAY FITTINGS

FOR TENDER PURPOSE ONLY

DS	RD	RD	–	13.01.17
APPVD.	REVWD.	CHKD.	REV.	DATE

CABLING
NOTES & DETAILS

WEST BENGAL POWER DEVELOPMENT CORPN. LTD.
WEST BENGAL, INDIA

SAGARDIGHI THERMAL POWER EXTENSION PROJECT
PHASE-III, UNITS # 5 (1 x 660 MW)

DEVELOPMENT CONSULTANTS PVT. LTD.
CONSULTING ENGINEERS

JOB NO. 12A05 | SCALE : NTS

DWG. NO. 12A05-DWG-E-0400 SHT. 16 OF 28 | REV. -

12A05-DWG-E-0400 Sh. 16 OF 28 13.01.2017
A4_DD (9-96) [210x297]

NOTES :-

1. ALL DIMENSIONS ARE IN MM.
2. +S INDICATES DISTANCE TO MAINTAIN THE 'SLOPE' OF THE TRENCH.
3. MOUNTING ARRANGEMENT IN CABLE TRENCH TYPE-C,CC,DD ETC. SHALL BE SIMILAR.
4. FOR CABLE TRENCH GROUNDING REFER DWG.NO. K3A02 -DWG-E-0600.
5. FOR LONG TRENCH WITHOUT ANY INTERMEDIATE CABLE EXIT, THE GAP "200" MAY BE DISPENSED WITH. HOWEVER, THE SAME SHALL BE PROVIDED FOR AT LEAST 1500mm ON EITHER SIDE OF THE EXIT.

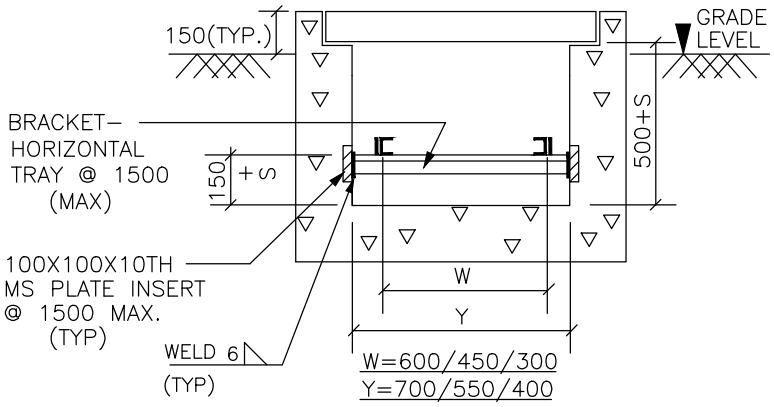

TR - A

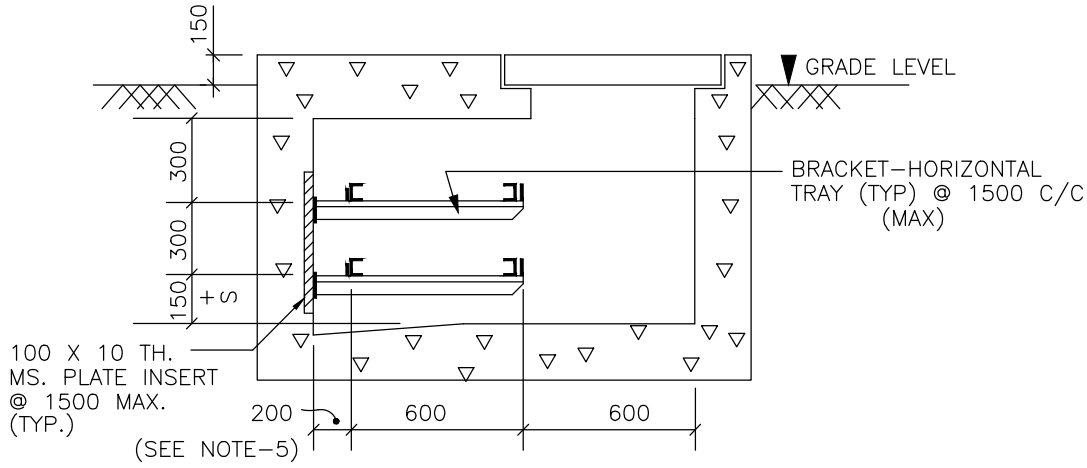

TR - B

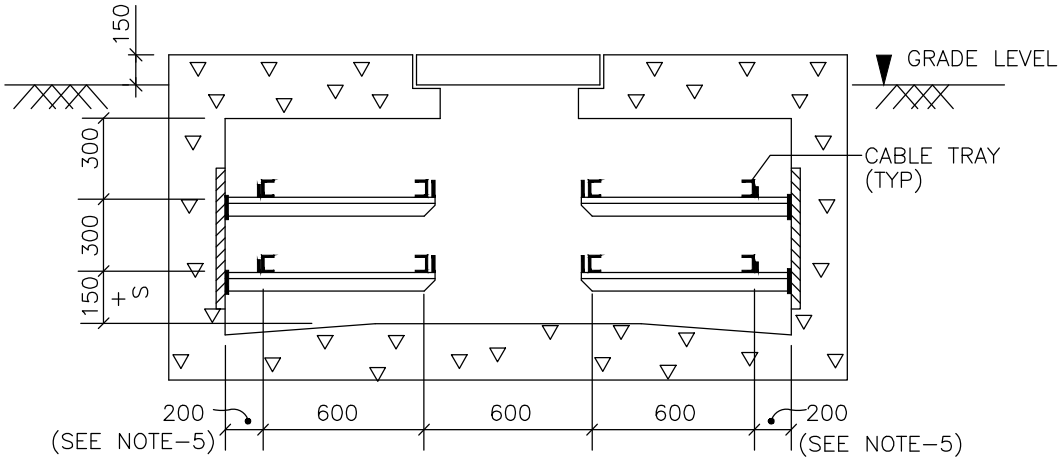

TR - BB

MOUNTING ARRANGEMENT
(IN CABLE TRENCH)

FOR TENDER PURPOSE ONLY

DS	RD	RD	-	13.01.17
APPVD.	REVWD.	CHKD.	REV.	DATE

CABLING NOTES & DETAILS

WEST BENGAL POWER DEVELOPMENT CORPN. LTD.
WEST BENGAL, INDIA

SAGARDIGHI THERMAL POWER EXTENSION PROJECT
PHASE-III, UNITS # 5 (1 x 660 MW)

DEVELOPMENT CONSULTANTS PVT. LTD.
CONSULTING ENGINEERS

JOB NO. 12A05 | SCALE : NTS

DWG. NO. 12A05-DWG-E-0400 SHT. 17 OF 28 | REV. -

12A05-DWG-E-0400 Sh. 17 OF 28 13.01.2017

A4_DD (9-96) [210x297]

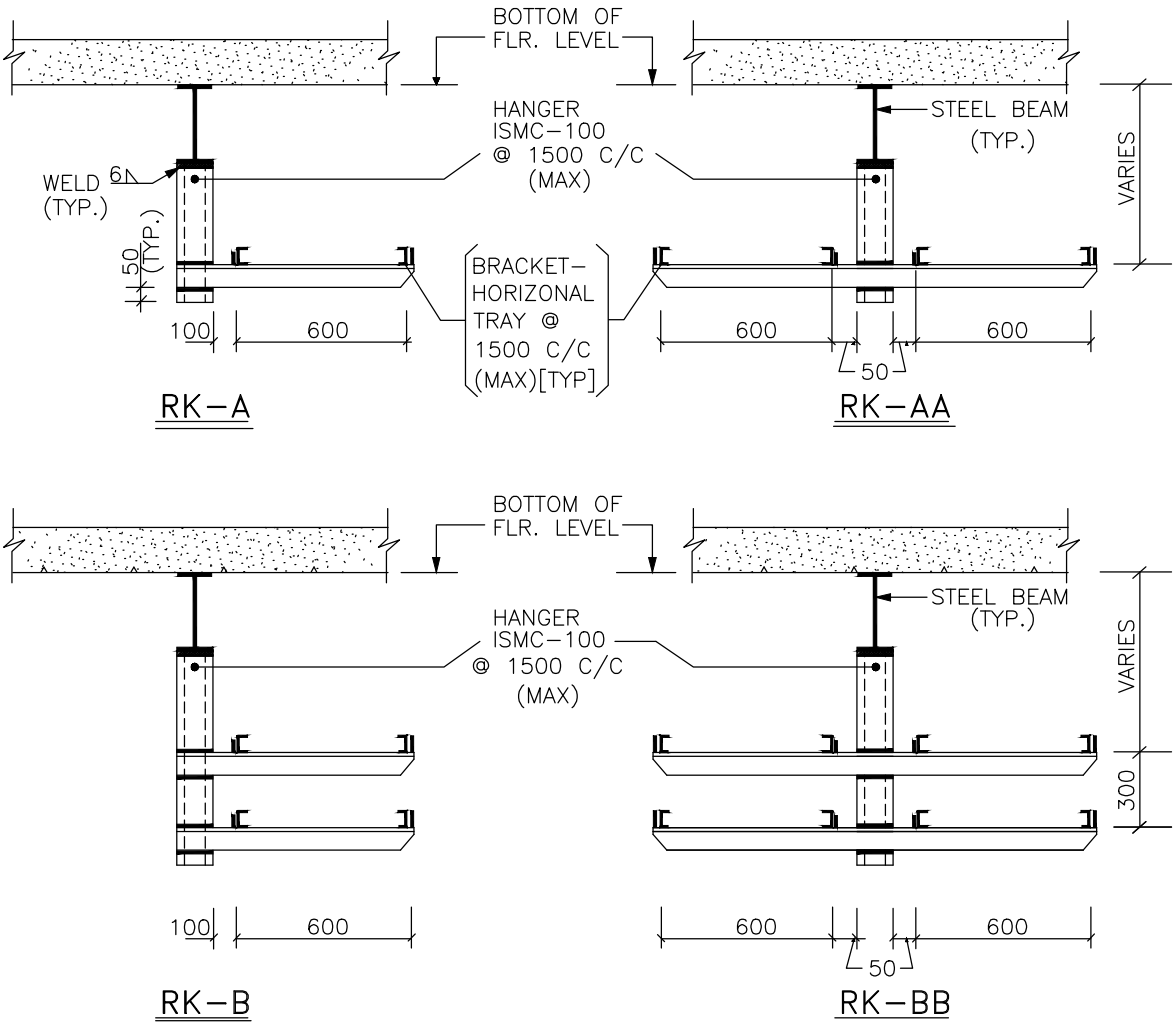

TABLE-1

RACK		NO. OF
TYPE	WIDTH	TIER
A1	450	1
B1	450	2
A2	300	1
B2	300	2

NOTES :-

1. ALL DIMENSIONS ARE IN MM.
2. FOR OVERHEAD CABLE TRAY GROUNDING REFER DWG.NO. K3A02-DWG-E0600
3. FOR RACK TYPE RK-C, RK-CC, RK-D, RK-DD ETC. THE ARRANGEMENT SHALL BE SIMILAR.

MOUNTING ARRANGEMENT

(FROM BEAM)

FOR TENDER PURPOSE ONLY

DS	RD	RD	-	13.01.17
APPVD.	REVWD.	CHKD.	REV.	DATE

CABLING
NOTES & DETAILS

WEST BENGAL POWER DEVELOPMENT CORPN. LTD.
WEST BENGAL, INDIA

SAGARDIGHI THERMAL POWER EXTENSION PROJECT
PHASE-III, UNITS # 5 (1 x 660 MW)

DEVELOPMENT CONSULTANTS PVT. LTD.
CONSULTING ENGINEERS

JOB NO. 12A05 | SCALE : NTS

DWG. NO. 12A05-DWG-E-0400 SHT. 18 OF 28 | REV. -

12A05-DWG-E-0400 Sh. 18 OF 28 13.01.2017

A4_DD (9-96) [210x297]

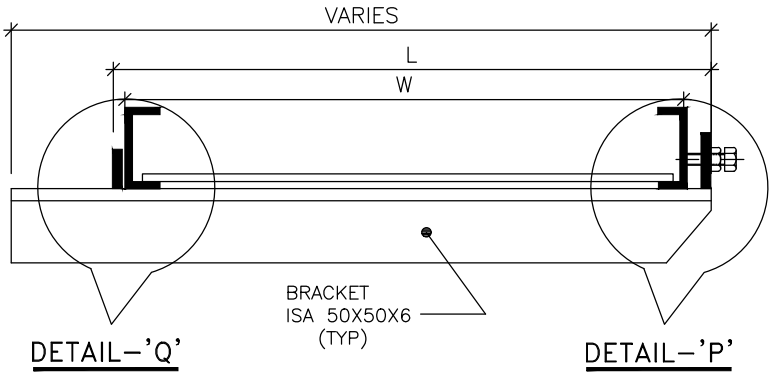

BRACKET

(HORIZONTAL CABLE TRAY)

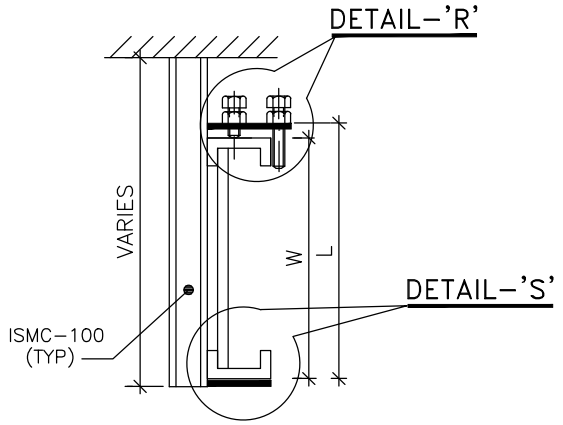

BRACKET

(VERTICAL CABLE TRAY)

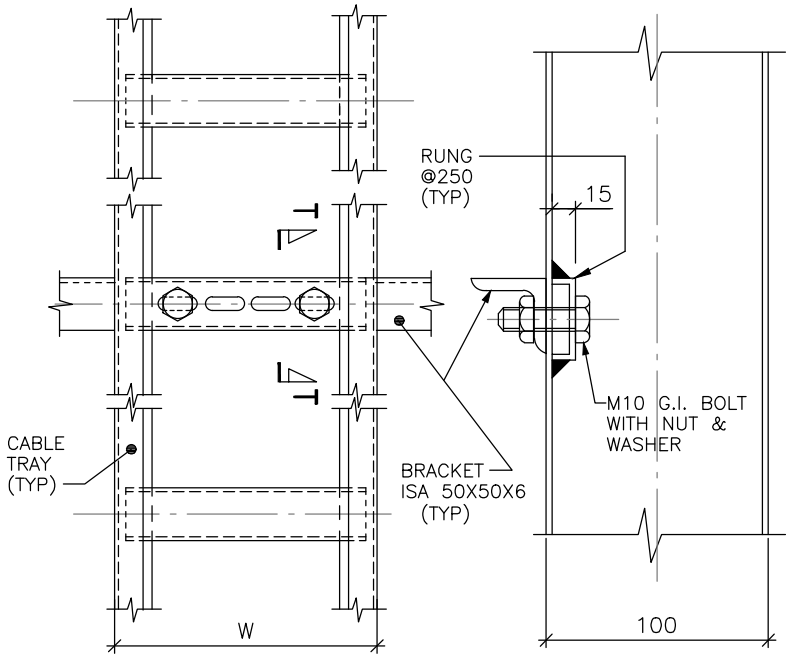

BRACKET

(VERTICAL CABLE SHAFT)

W	600	450	300
L	625	475	325

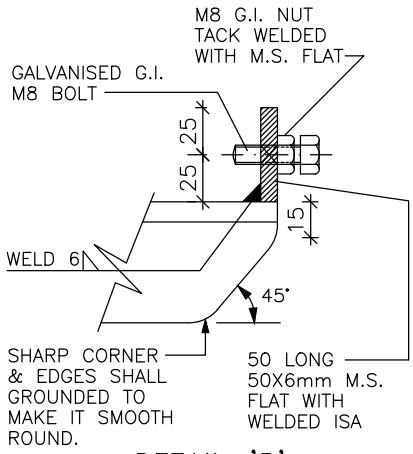

DETAIL–'P'

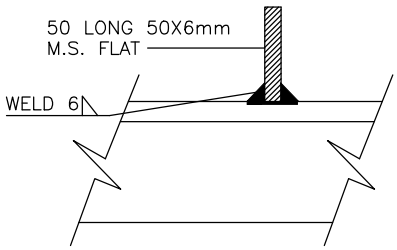

DETAIL–'Q'

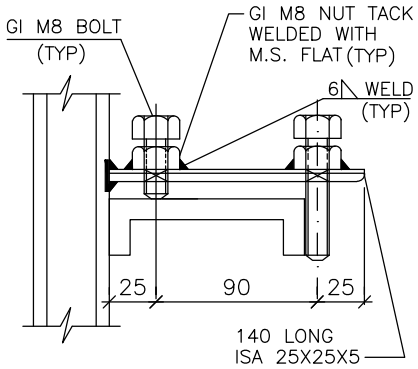

DETAIL–'R'

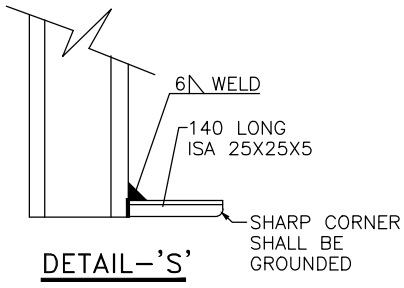

DETAIL–'S'

FOR TENDER PURPOSE ONLY

DS	RD	RD	–	13.01.17
APPVD.	REVWD.	CHKD.	REV.	DATE

CABLING
NOTES & DETAILS

WEST BENGAL POWER DEVELOPMENT CORPN. LTD.
WEST BENGAL, INDIA

SAGARDIGHI THERMAL POWER EXTENSION PROJECT
PHASE–III, UNITS # 5 (1 x 660 MW)

DEVELOPMENT CONSULTANTS PVT. LTD.
CONSULTING ENGINEERS

JOB NO. 12A05 | SCALE : NTS

DWG. NO. 12A05–DWG–E–0400 | REV. -
SHT. 19 OF 28

12A05-DWG-E-0400 Sh. 19 OF 28 13.01.2017

A4_DD (9–96) [210x297]

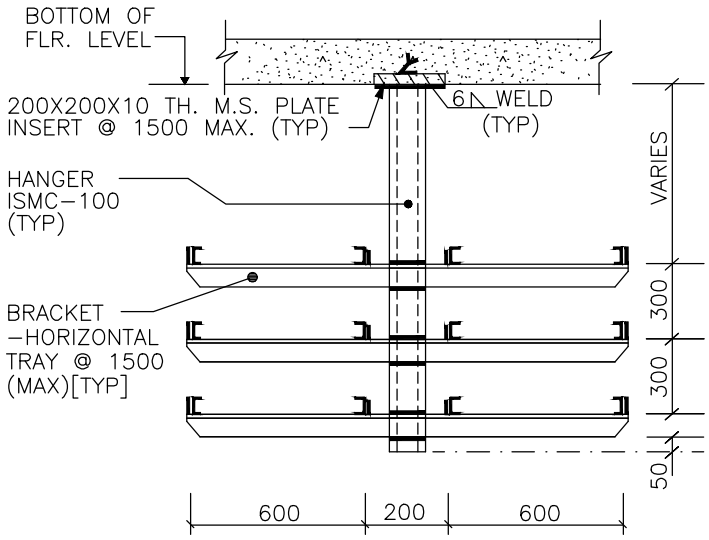

MOUNTING ARRANGEMENT

(FROM CEILING)

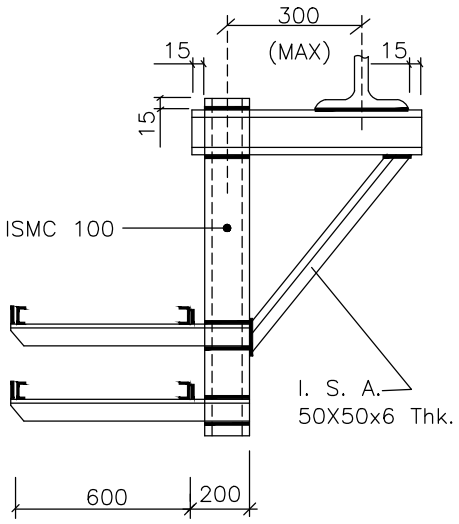

MOUNTING ARRANGEMENT

(FROM FLOOR BEAM)

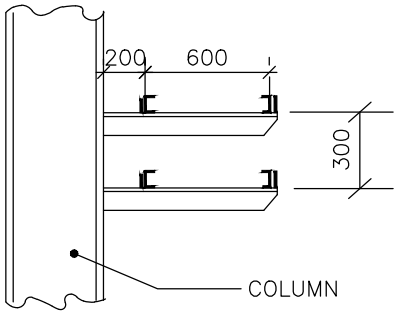

MOUNTING ARRANGEMENT

(FROM STEEL COLUMN)

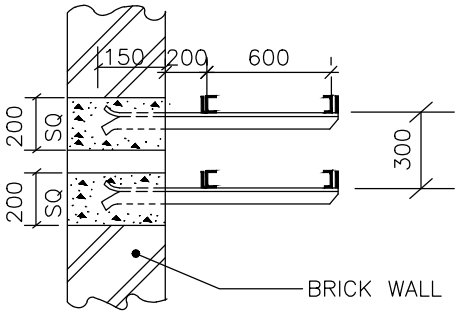

MOUNTING ARRANGEMENT

(FROM BRICK WALL)

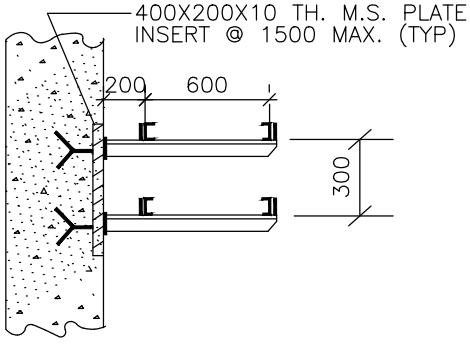

MOUNTING ARRANGEMENT

(FROM CONCRETE COLUMN)

NOTES :-

1. ALL DIMENSIONS ARE IN MM.
2. THE NOS. OF TIER AND WIDTH OF EACH TRAY SHALL BE AS PER RACK TYPE NOS.
3. FOR OVERHEAD CABLE TRAY GROUNDING REFER DWG.NO. K3A14-DWG-E-0600

FOR TENDER PURPOSE ONLY

DS	RD	RD	-	13.01.17
APPVD.	REVWD.	CHKD.	REV.	DATE

CABLING
NOTES & DETAILS

WEST BENGAL POWER DEVELOPMENT CORPN. LTD.
WEST BENGAL, INDIA

SAGARDIGHI THERMAL POWER EXTENSION PROJECT
PHASE-III, UNITS # 5 (1 x 660 MW)

DEVELOPMENT CONSULTANTS PVT. LTD.
CONSULTING ENGINEERS

JOB NO. 12A05 | SCALE : NTS

DWG. NO. 12A05-DWG-E-0400 SHT. 20 OF 28 | REV. -

12A05-DWG-E-0400 Sh. 20 OF 28 13.01.2017

A4_DD (9-96) [210x297]

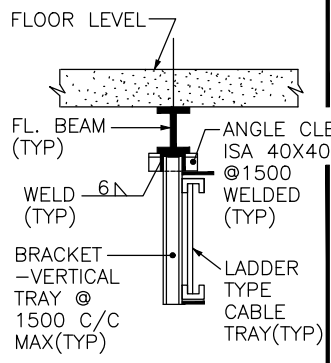

STYLE–1

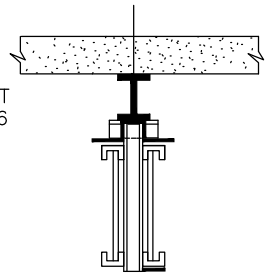

STYLE–2

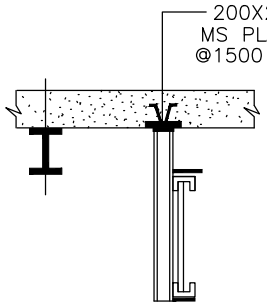

STYLE–3

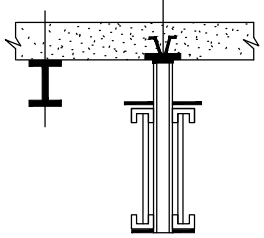

STYLE–4

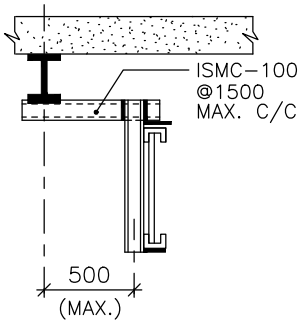

STYLE–5

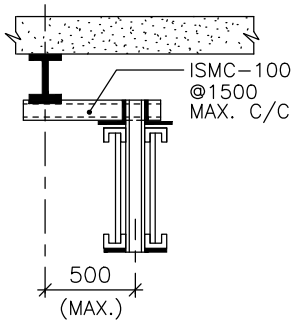

STYLE–6

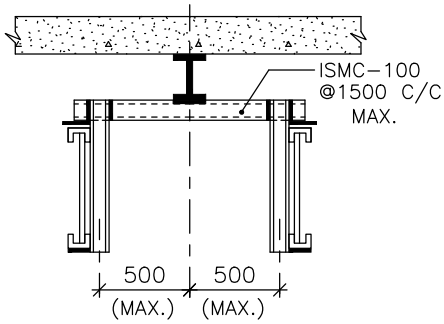

STYLE–7

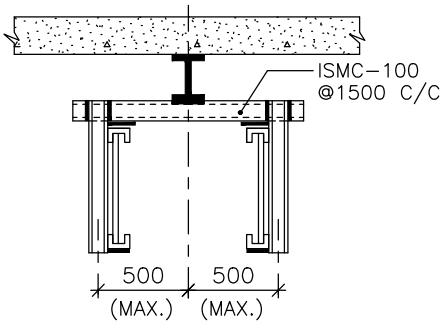

STYLE–8

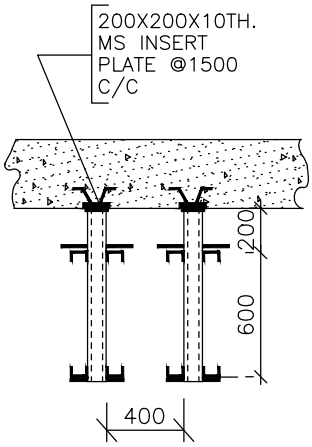

STYLE–9

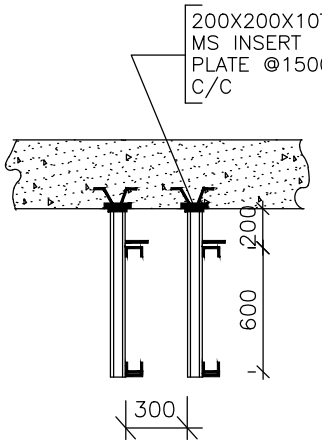

STYLE–10

MOUNTING ARRANGEMENT

(VERTICAL CABLE TRAY)

FOR TENDER PURPOSE ONLY

DS	RD	RD	–	13.01.17
APPVD.	REVWD.	CHKD.	REV.	DATE

CABLING NOTES & DETAILS

WEST BENGAL POWER DEVELOPMENT CORPN. LTD.
WEST BENGAL, INDIA

SAGARDIGHI THERMAL POWER EXTENSION PROJECT
PHASE–III, UNITS # 5 (1 x 660 MW)

DEVELOPMENT CONSULTANTS PVT. LTD.
CONSULTING ENGINEERS

JOB NO. 12A05 | SCALE : NTS

DWG. NO. 12A05–DWG–E–0400 SHT. 21 OF 28 | REV. -

12A05-DWG-E-0400 Sh. 21 OF 28 13.01.2017

A4_DD (9–96) [210x297]

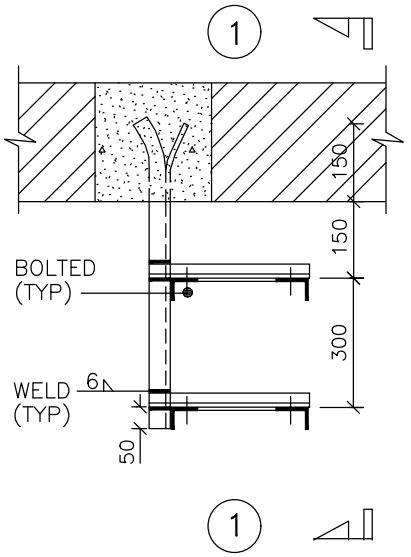

PLAN
ALT.1

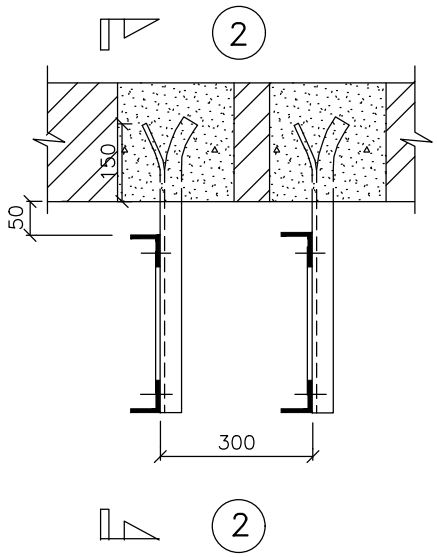

PLAN
ALT.2

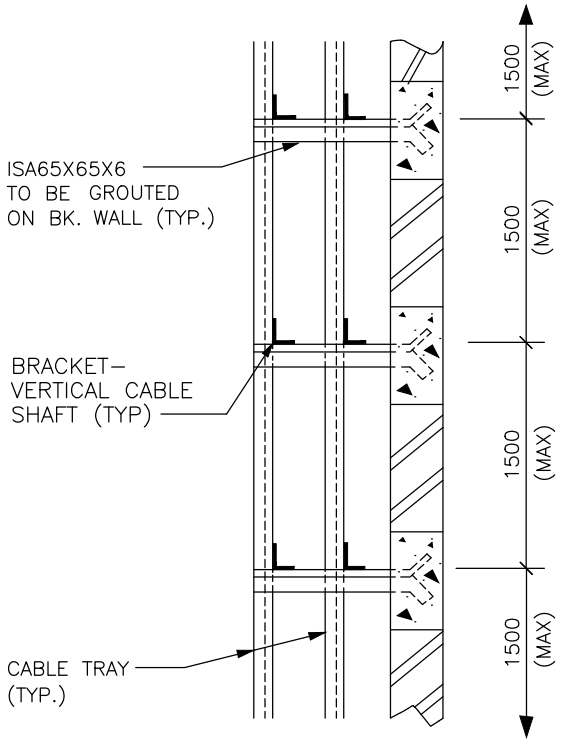

SEC:1–1

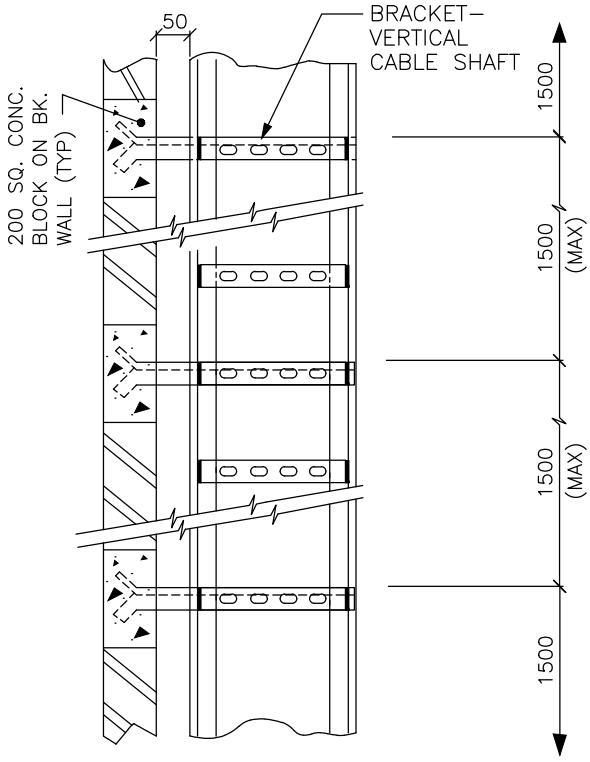

SEC:2–2

MOUNTING ARRANGEMENT
(CABLE SHAFT ON BRICKWALL)

NOTE

FOR CABLE SHAFT OF TYPE SH.–A, SH–C, THE ARRANGEMENT SHALL BE SIMILAR TO SH–B SHOWN HERE IN.

FOR TENDER PURPOSE ONLY

DS	RD	RD	–	13.01.17
APPVD.	REVWD.	CHKD.	REV.	DATE

CABLING
NOTES & DETAILS

WEST BENGAL POWER DEVELOPMENT CORPN. LTD.
WEST BENGAL, INDIA

SAGARDIGHI THERMAL POWER EXTENSION PROJECT
PHASE–III, UNITS # 5 (1 x 660 MW)

DEVELOPMENT CONSULTANTS PVT. LTD.
CONSULTING ENGINEERS

JOB NO. 12A05 | SCALE : NTS

DWG. NO. 12A05–DWG–E–0400 | REV. -
SHT. 22 OF 28

12A05-DWG-E-0400 Sh. 22 OF 28 13.01.2017

A4_DD (9–96) [210x297]

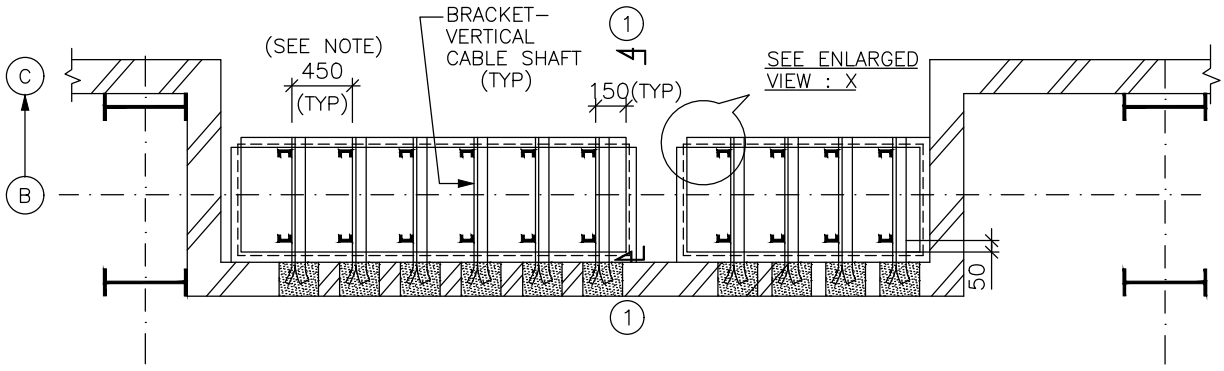

PLAN AT EL.3.5M

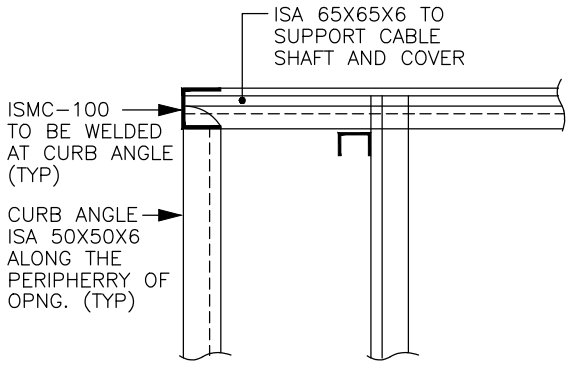

ENLARGED VIEW : X
TYPICAL DETAILS OF CABLE SHAFT

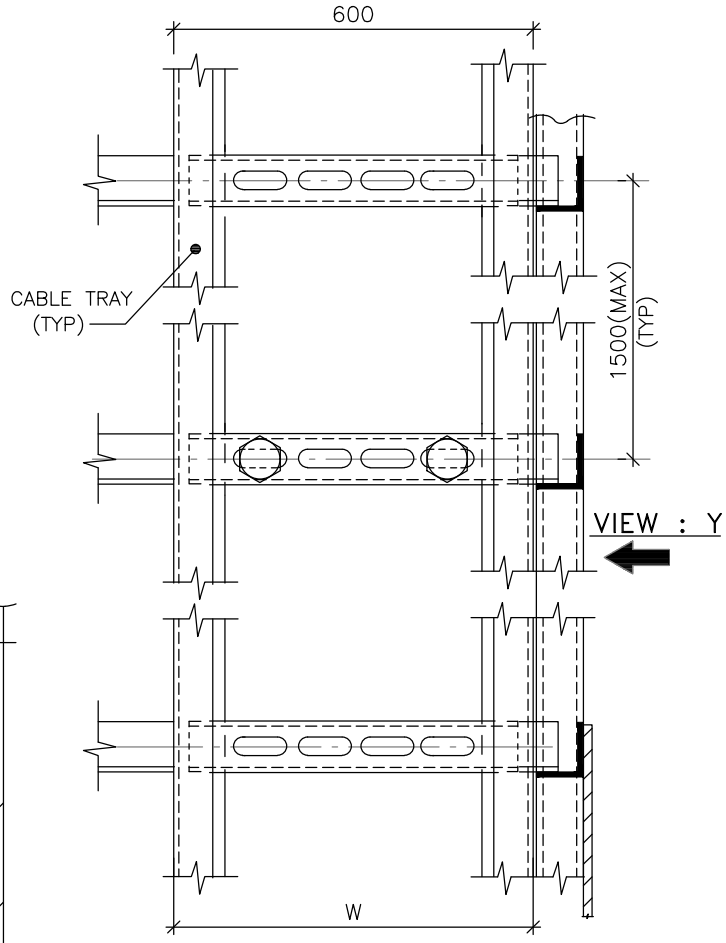

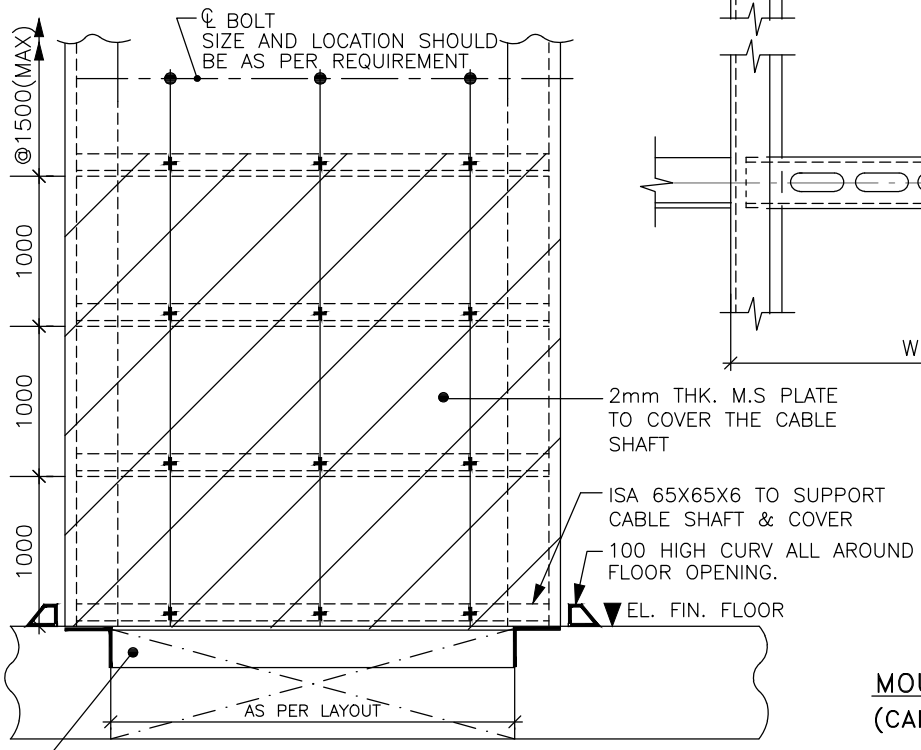

VIEW : Y

NOTE:–

THE SPACING MAY BE REDUCED TO 300, IF CABLE TRAY IS APPLICABLE FROM BOTH SIDE.

MOUNTING ARRANGEMENT
(CABLE SHAFT MAIN PLANT)

FOR TENDER PURPOSE ONLY

DS	RD	RD	–	13.01.17
APPVD.	REVWD.	CHKD.	REV.	DATE

CABLING
NOTES & DETAILS

WEST BENGAL POWER DEVELOPMENT CORPN. LTD.
WEST BENGAL, INDIA

SAGARDIGHI THERMAL POWER EXTENSION PROJECT
PHASE–III, UNITS # 5 (1 x 660 MW)

DEVELOPMENT CONSULTANTS PVT. LTD.
CONSULTING ENGINEERS

JOB NO. 12A05 | SCALE : NTS

DWG. NO. 12A05–DWG–E–0400 | REV. -
SHT. 23 OF 28

12A05-DWG-E-0400 Sh. 23 OF 28 13.01.2017

A4_DD (9–96) [210x297]

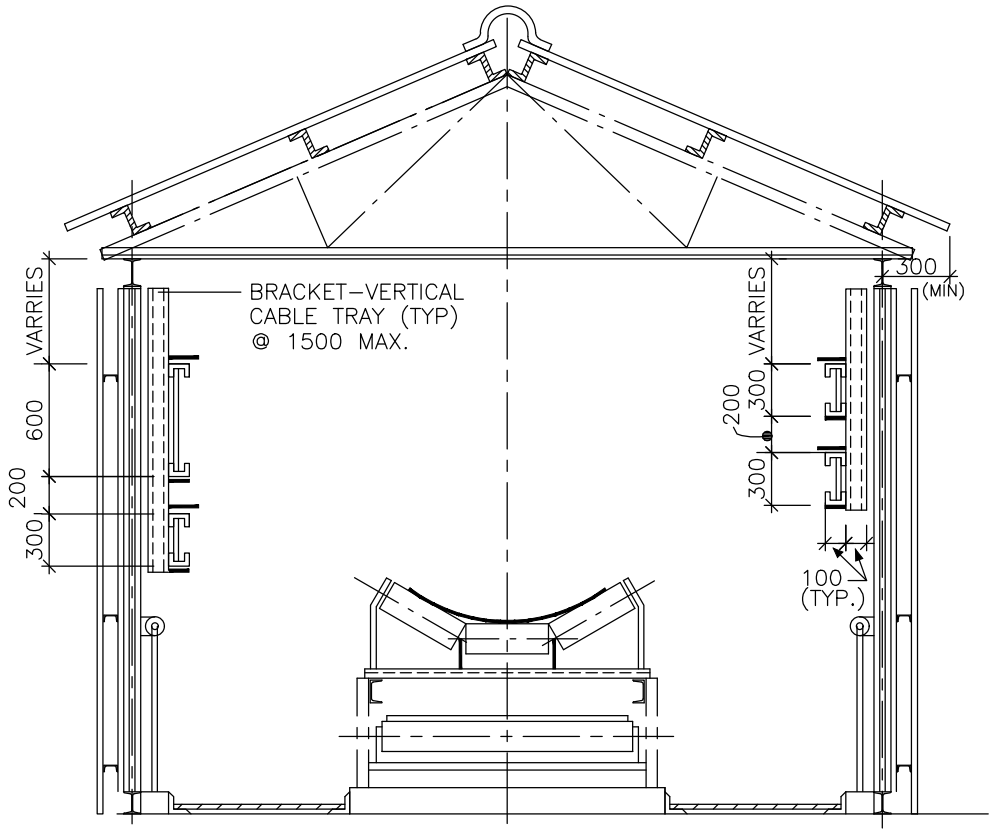

MOUNTING ARRANGEMENT

(INSIDE CONV. GALLERY–ALT–I)

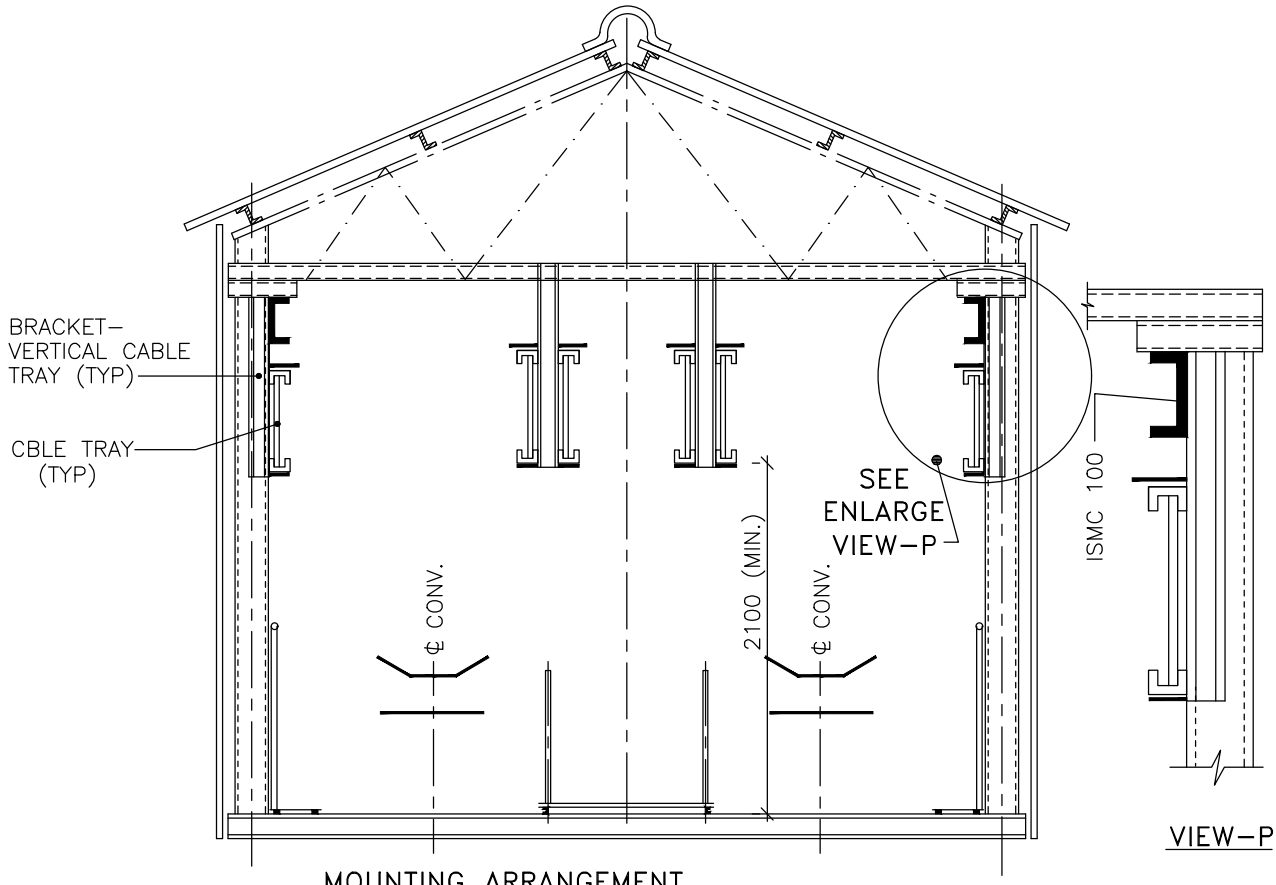

MOUNTING ARRANGEMENT

(INSIDE CONV. GALLERY–ALT–II)

FOR TENDER PURPOSE ONLY

DS	RD	RD	–	13.01.17
APPVD.	REVWD.	CHKD.	REV.	DATE

CABLING
NOTES & DETAILS

WEST BENGAL POWER DEVELOPMENT CORPN. LTD.
WEST BENGAL, INDIA

SAGARDIGHI THERMAL POWER EXTENSION PROJECT
PHASE–III, UNITS # 5 (1 x 660 MW)

DEVELOPMENT CONSULTANTS PVT. LTD.
CONSULTING ENGINEERS

JOB NO. 12A05 | SCALE : NTS

DWG. NO. 12A05–DWG–E–0400 SHT. 24 OF 28 | REV. -

12A05-DWG-E-0400 Sh. 24 OF 28 13.01.2017

A4_DD (9–96) [210x297]

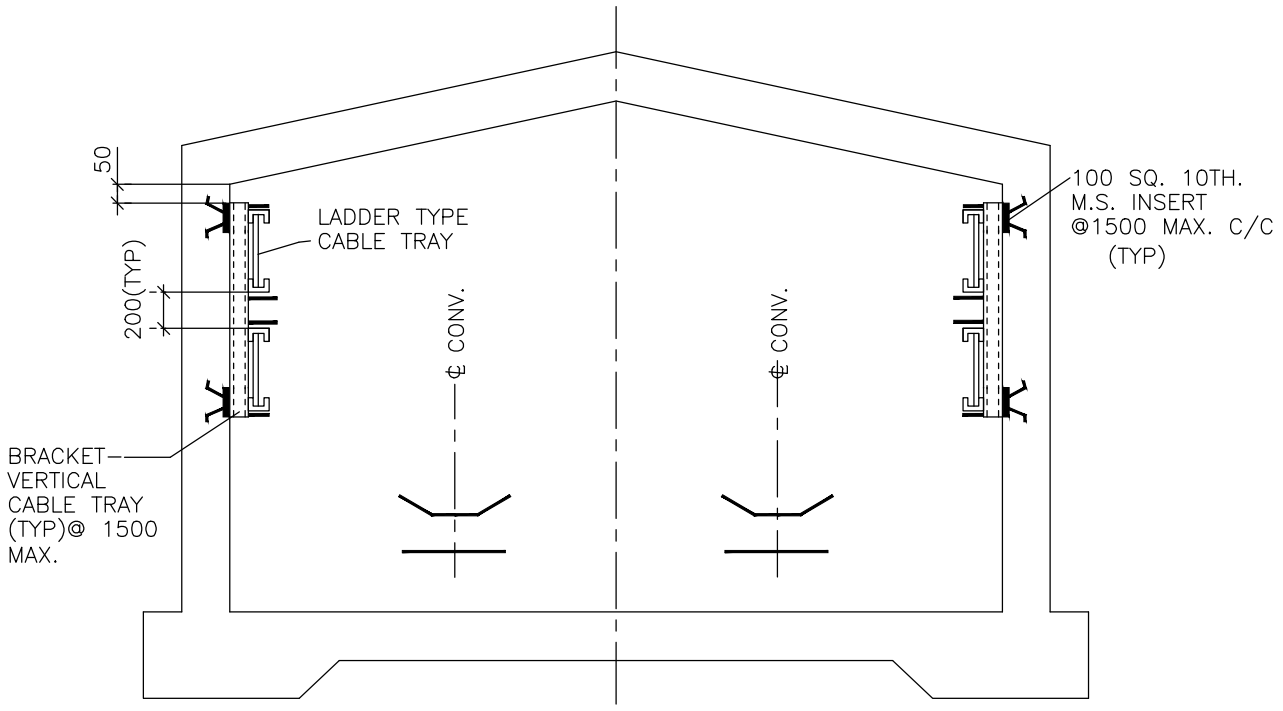

MOUNTING ARRANGEMENT

(IN CONVEYOR TUNNEL–ALT–I)

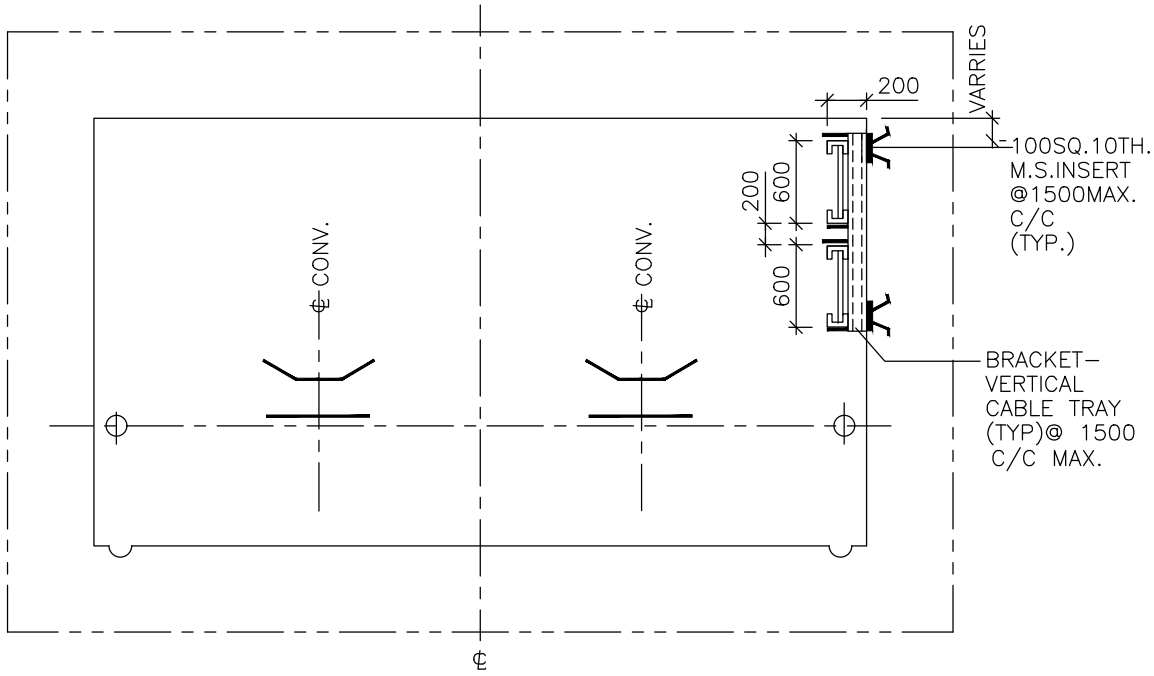

MOUNTING ARRANGEMENT

(IN CONVEYOR TUNNEL–ALT–II)

NOTE:–

ALL DIMENSIONS ARE IN MM.

FOR TENDER PURPOSE ONLY

					CABLING NOTES & DETAILS	DEVELOPMENT CONSULTANTS PVT. LTD. CONSULTING ENGINEERS
					WEST BENGAL POWER DEVELOPMENT CORPN. LTD. WEST BENGAL, INDIA	JOB NO. 12A05 / SCALE : NTS
DS	RD	RD	–	13.01.17	SAGARDIGHI THERMAL POWER EXTENSION PROJECT PHASE–III, UNITS # 5 (1 x 660 MW)	DWG. NO. 12A05–DWG–E–0400 SHT. 25 OF 28 / REV. -
APPVD.	REVWD.	CHKD.	REV.	DATE		

12A05-DWG-E-0400 Sh. 25 OF 28 13.01.2017

A4_DD (9–96) [210x297]

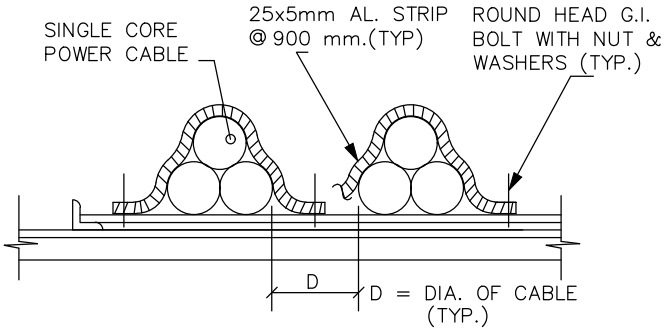

CABLE CLAMPS IN TREFOIL FORMATION FOR SINGLE CORE POWER CABLES

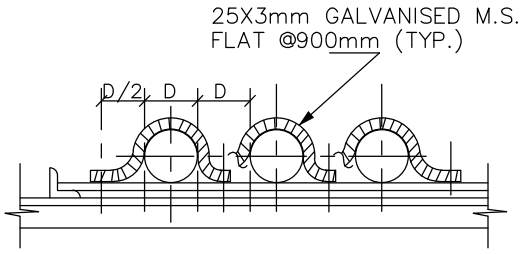

CABLE CLAMPS FOR MULTICORE POWER CABLES (NOT TOUCHING EACHOTHER)

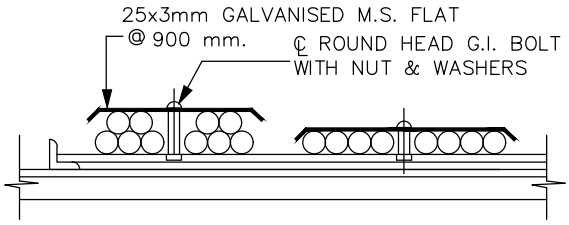

CLAMPING ARRANGEMENT OF CONTROL CABLES

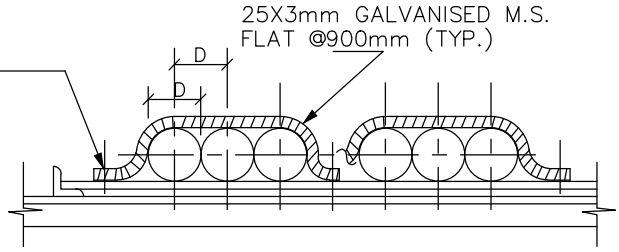

CABLE CLAMPS FOR MULTICORE POWER CABLES (TOUCHING EACHOTHER)

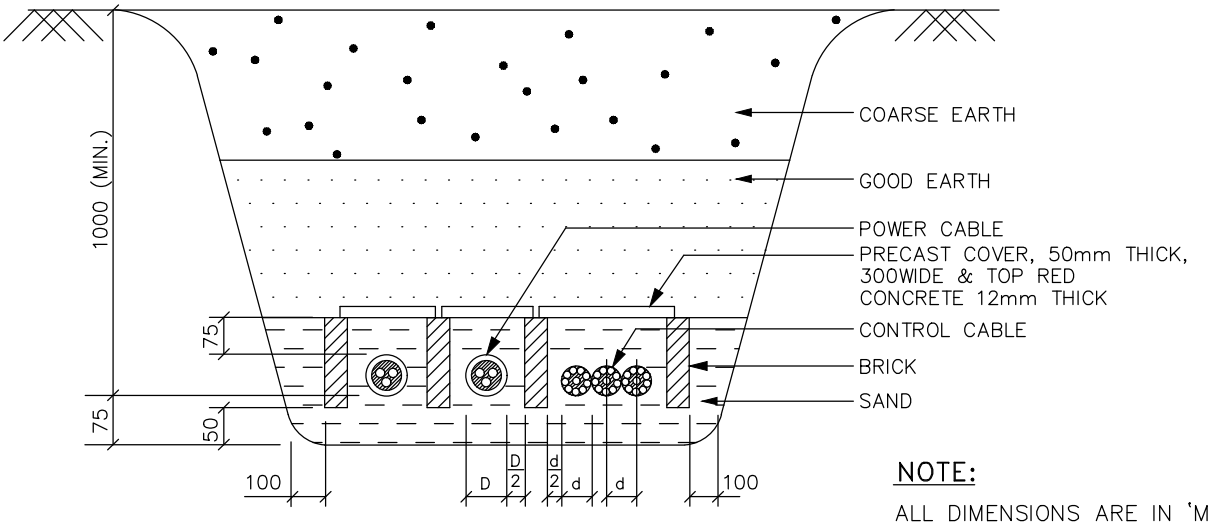

BURIED CABLE LAYING DETAILS

NOTE:

ALL DIMENSIONS ARE IN 'MM'.

FOR TENDER PURPOSE ONLY

DS	RD	RD	–	13.01.17
APPVD.	REVWD.	CHKD.	REV.	DATE

CABLING NOTES & DETAILS

WEST BENGAL POWER DEVELOPMENT CORPN. LTD.
WEST BENGAL, INDIA

SAGARDIGHI THERMAL POWER EXTENSION PROJECT
PHASE–III, UNITS # 5 (1 x 660 MW)

DEVELOPMENT CONSULTANTS PVT. LTD.
CONSULTING ENGINEERS

JOB NO. 12A05 | SCALE : NTS

DWG. NO. 12A05–DWG–E–0400 SHT. 26 OF 28 | REV. -

12A05-DWG-E-0400 Sh. 26 OF 28 13.01.2017

A4_DD (9–96) [210x297]

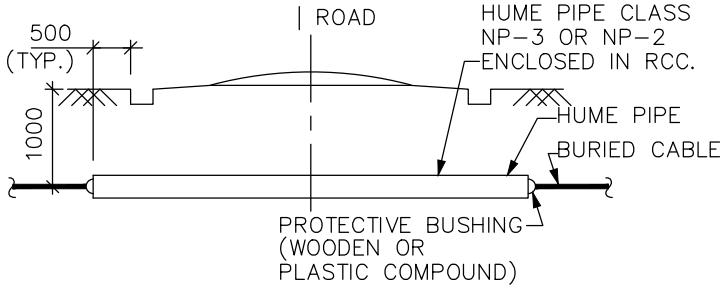

ROAD CROSSING
OF BURIED CABLE

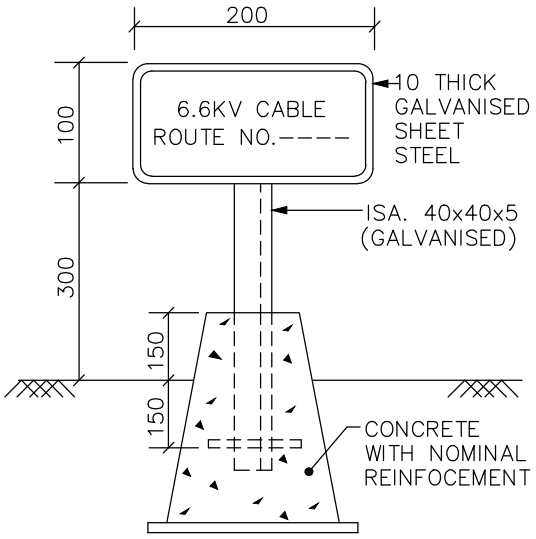

CABLE ROUTE MAKER
(VOLTAGE TO BE MARKED)

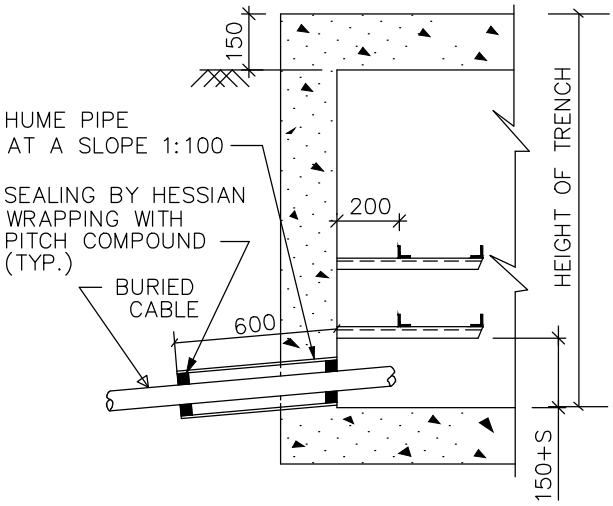

TYP. DETAILS OF BURIED CABLE
ENTRY TO BLDG. OR CABLE TRENCH

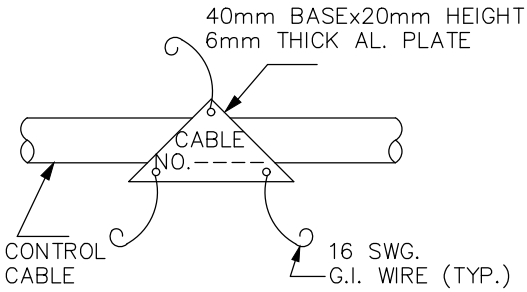

CABLE TAG
CONTROL CABLE

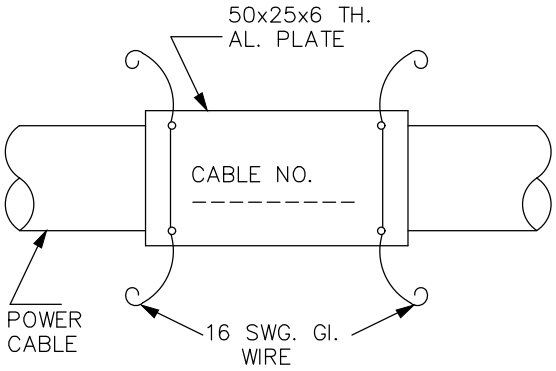

CABLE TAG
POWER CABLE

NOTE:

ALL DIMENSIONS ARE IN 'MM'.

FOR TENDER PURPOSE ONLY

DS	RD	RD	–	13.01.17
APPVD.	REVWD.	CHKD.	REV.	DATE

CABLING
NOTES & DETAILS

WEST BENGAL POWER DEVELOPMENT CORPN. LTD.
WEST BENGAL, INDIA

SAGARDIGHI THERMAL POWER EXTENSION PROJECT
PHASE-III, UNITS # 5 (1 x 660 MW)

DEVELOPMENT CONSULTANTS PVT. LTD.
CONSULTING ENGINEERS

JOB NO. 12A05 | SCALE : NTS

DWG. NO. 12A05-DWG-E-0400 | REV. -
SHT. 27 OF 28

12A05-DWG-E-0400 Sh. 27 OF 28 13.01.2017

A4_DD (9-96) [210x297]

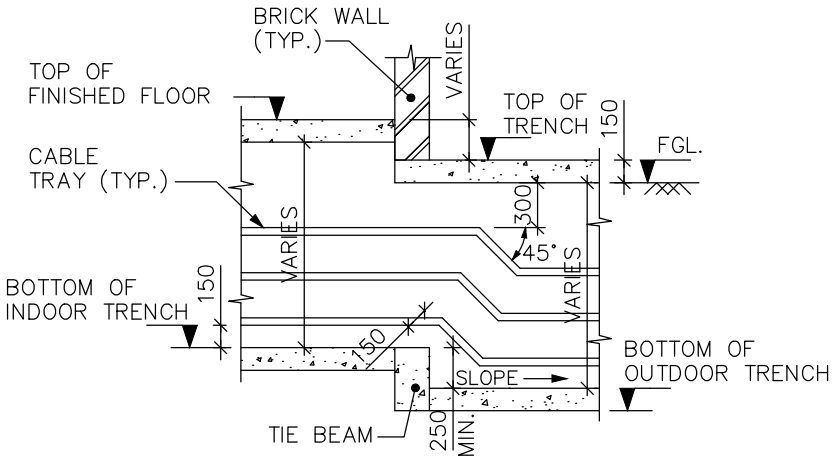

TYPICAL DETAILS OF CABLE TRENCH ENTRY TO BUILDING

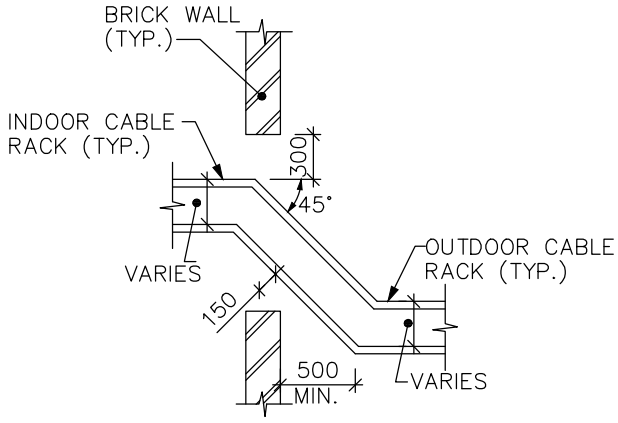

TYPICAL DETAILS OF CABLE RACK ENTRY TO BUILDINGS

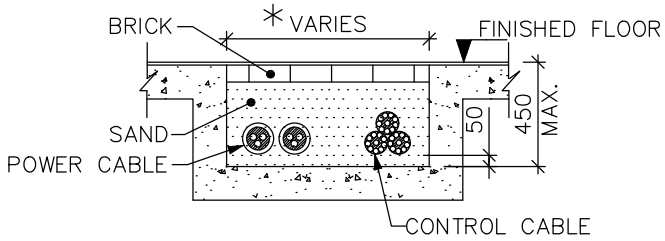

CABLE LAYING IN SHALLOW TRENCH (INDOOR)

NOTE:

1. ALL DIMENSIONS ARE IN 'MM'.
2. THE PORTION OF FLOOR ABOVE THE TRENCH MARKED '*' SHALL BE FINISHED WITH WEAK MORTER.

FOR TENDER PURPOSE ONLY

DS	RD	RD	–	13.01.17
APPVD.	REVWD.	CHKD.	REV.	DATE

CABLING
NOTES & DETAILS

WEST BENGAL POWER DEVELOPMENT CORPN. LTD.
WEST BENGAL, INDIA

SAGARDIGHI THERMAL POWER EXTENSION PROJECT
PHASE–III, UNITS # 5 (1 x 660 MW)

DEVELOPMENT CONSULTANTS PVT. LTD.
CONSULTING ENGINEERS

JOB NO. 12A05 | SCALE : NTS

DWG. NO. 12A05–DWG–E–0400 | REV. -
SHT. 28 OF 28

12A05-DWG-E-0400 Sh. 28 OF 28 13.01.2017

A4_DD (9–96) [210x297]

GROUNDING
NOTES & DETAILS

DWG. NO. 12A05-DWG-E-0600

FOR TENDER PURPOSE ONLY

12A05-E-0600 Sh.Cover 13.01.2017

GROUNDING NOTES

1.0 These grounding notes and details shall be read and construed in conjunction with grounding drawings and specification.

2.0 The grounding installation work shall conform to the requirements of the Indian Electricity Rules and code of Practice for Earthing (IS:3043) as amended up-to-date in India. For the work in other country, the statutury rules and code of practice in vogue there in shall be followed.

3.0 The main ground grid shall be buried in earth at a minimum depth of 1000 mm below grade. A minimum earth coverage of 300 mm shall be provided between the ground grid conductor and the bottom of trench/foundation/underground pipe at the crossing.

4.0 Ground grid conductors around a building/switchyard fence shall be buried outside the boundary at a minimum distance of 1200 mm.

5.0 A additional grid of 1500 mm x 1500 mm comprising of closely spaced (300 mmx300 mm) conductor at a depth of 300 mm from finished grade level shall be provided below the operating handle of Isolators Earth switches and Circuit Breaker operating boxes located in outdoor HV/EHV substation. This grid shall be connected to the main ground grid. The ground connection to operating handle shall be made of flexible connection.

6.0 The ground grid conductor below grade shall be of bare 40mm Ø mild steel rod. Ground electrode shall be 40mm Ø x 3000 mm long mild steel rod, driven into the ground and connected to the ground grid conductor.

7.0 Riser/pigtail from the ground grid shall be 40mm Ø mild steel rod and shall prroject 300 mm above grade/concrete floor level unless otherwise shown.

8.0 All ground connections below grade shall be made by electric arc welding with low hydrogen content electrode. Bending of the conductor where necessary shall be done by gas heating.

9.0 Above grade, 50 x 6 mm galvanised mild steel flats shall be run as main ground conductors along building steels, walls and cable trays and securely fixed to the same by welding/clamping at intervals not exceeding 1500 mm.
The ground conductors shall be interconnected between them and to the main ground grid through risers.

FOR TENDER PURPOSE ONLY

DS	RD	RD	–	13.01.17
APPVD.	REVWD.	CHKD.	REV.	DATE

GROUNDING NOTES & DETAILS

WEST BENGAL POWER DEVELOPMENT CORPN. LTD.
WEST BENGAL, INDIA

SAGARDIGHI THERMAL POWER EXTENSION PROJECT
PHASE–III, UNITS # 5 (1 x 660 MW)

DEVELOPMENT CONSULTANTS PVT. LTD.
CONSULTING ENGINEERS

JOB NO. 12A05 | SCALE : NTS

DWG. NO. 12A05–DWG–E–0600 | REV. -
SHT. 01 OF 26

12A05-DWG-E-0600 Sh. 1 OF 26 13.01.2017
A4_DD (9–96) [210x297]

10. All electrical equipment and associated non-current carrying metal works, supporting structures, building/boiler columns,fence, system neutrals, lighting masts/arresters shall be connected to the plant ground system.

11. Two seperate and distinct ground connections shall be provided for grounding of electrical equipment frameworks.

12. Miscellaneous devices such as junction boxes, pull boxes, push-button stations, lockout switches, cable end boxes etc. shall be effectively grounded whether specifically shown or not.

13. Ground conductor connections above grade shall be generally made by electric are welding. The connection shall be coated with cold galvanising/weather resistant paints.

14. Bolted connection shall be made only for grounding of equipment/ devices and some removable structures. The contact surfaces shall be throughly cleaned before connection to ensure good electrical contact.

15. A continuous 50 x 6 mm galvanised M.S flat ground conductor shall be installed along the cable raceway and securely attched to each tray section, forming a solidly grounded tray system.

16. A 16 Swg G.I. wire shall be run along the metalic conduit and shall be securely tied with the same at an interval 300 mm.

    Grounding connection or wire jumpers shall be installed where flexible conduit is used to connect rigid conduit to equipment.

17. Crane rails shall be grounded at both ends. in addition all joints shall be bonded to provide electrical continuity.

18. Fence within the ground grid shall be bonded to the plant ground system at regular interval not exceeding ten(10) meters. Fence gate shall be separately grounded with flexible connection to permit movement.

19. For shielding, the ground conductors shall be taken right upto the top along the structure/chimney and connected directly to the lightning masts.

20. The poles used for distribution line and / or street light shall be grounded at the bottom.

FOR TENDER PURPOSE ONLY

DS	RD	RD	–	13.01.17
APPVD.	REVWD.	CHKD.	REV.	DATE

GROUNDING NOTES & DETAILS

WEST BENGAL POWER DEVELOPMENT CORPN. LTD.
WEST BENGAL, INDIA

SAGARDIGHI THERMAL POWER EXTENSION PROJECT
PHASE–III, UNITS # 5 (1 x 660 MW)

DEVELOPMENT CONSULTANTS PVT. LTD.
CONSULTING ENGINEERS

JOB NO. 12A05 | SCALE : NTS

DWG. NO. 12A05–DWG–E–0600 | REV. -
SHT. 02 OF 26

A4_DD (9–96) [210x297]

21. *Ground electrodes shall be provided at connections with generator/ transformer neutrals, lightning arresters and lightning masts.*

22. *For ground connections, the conductor sizes shall be as listed below :-*

	Equipment		Galvanised mild steel flats
a.	400 KV and EHV equipment	:	50 x 6 mm
b.	11 kv, 3.3 KV equipment	:	50 x 6 mm
c.	Structures, Cable trays etc.	:	50 x 6 mm
d.	415 V, P.C.C., M.C.C. etc.	:	50 x 6 mm
e.	Motors above 90 KW, control panels	:	50 x 6 mm
f.	Motors above 30 KW upto 90 KW, lighting panels, local panels	:	35 x 6 mm
e.	Motors above 5 KW, 30 KW	:	25 x 3 mm
f.	Motors upto 5 KW, Miscellaneous devices etc.	:	No. 8 S.W.G. G.I. wire

FOR TENDER PURPOSE ONLY

DS	RD	RD	–	13.01.17
APPVD.	REVWD.	CHKD.	REV.	DATE

GROUNDING NOTES & DETAILS

WEST BENGAL POWER DEVELOPMENT CORPN. LTD.
WEST BENGAL, INDIA

SAGARDIGHI THERMAL POWER EXTENSION PROJECT
PHASE-III, UNITS # 5 (1 x 660 MW)

DEVELOPMENT CONSULTANTS PVT. LTD.
CONSULTING ENGINEERS

JOB NO. 12A05 | SCALE : NTS

DWG. NO. 12A05-DWG-E-0600 | REV. -
SHT. 03 OF 26

A4_DD (9-96) [210x297]

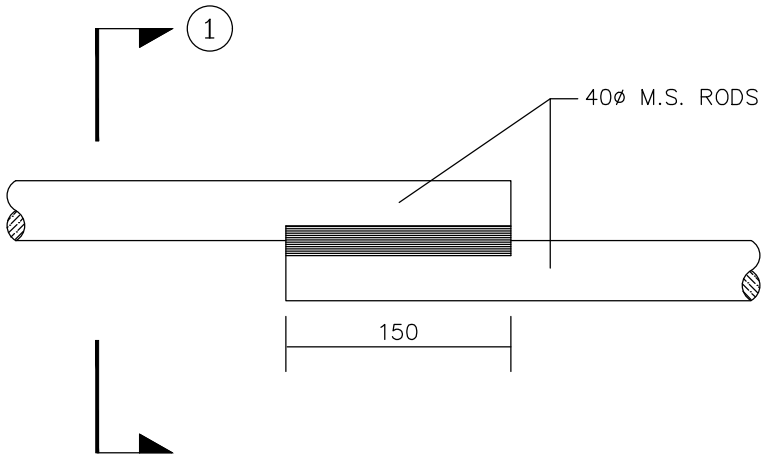

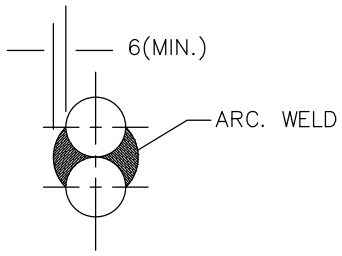

SECTION – 1

LAP JOINT
BETWEEN M.S. RODS

FOR TENDER PURPOSE ONLY

DS	RD	RD	–	13.01.17
APPVD.	REVWD.	CHKD.	REV.	DATE

GROUNDING
NOTES & DETAILS

WEST BENGAL POWER DEVELOPMENT CORPN. LTD.
WEST BENGAL, INDIA

SAGARDIGHI THERMAL POWER EXTENSION PROJECT
PHASE–III, UNITS # 5 (1 x 660 MW)

DEVELOPMENT CONSULTANTS PVT. LTD.
CONSULTING ENGINEERS

JOB NO. 12A05 | SCALE : NTS

DWG. NO. 12A05–DWG–E–0600 | REV. -
SHT. 04 OF 26

12A05-DWG-E-0600 Sh. 4 OF 26 13.01.2017

A4_DD (9–96) [210x297]

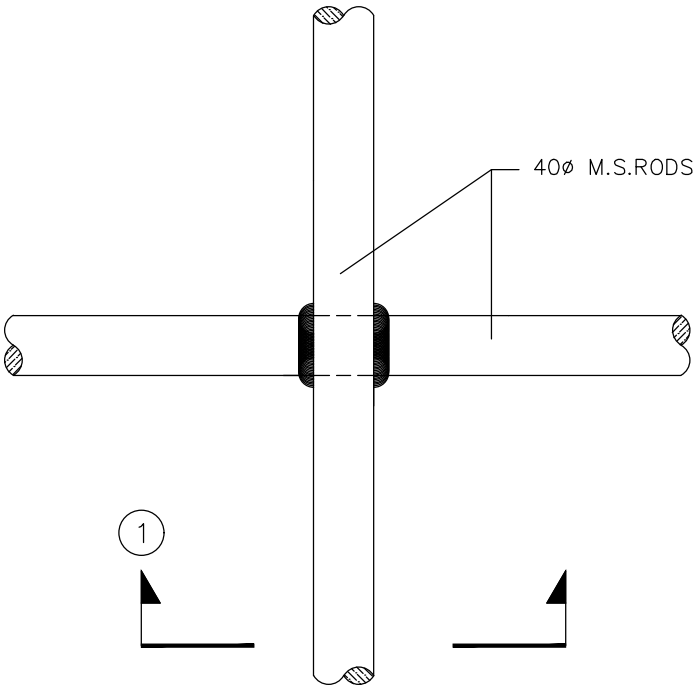

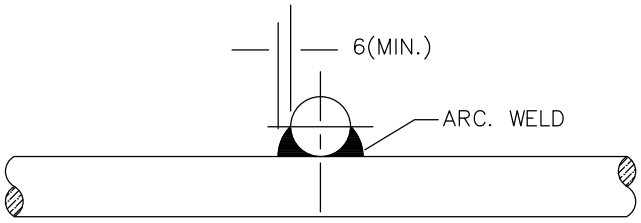

SECTION – 1

CROSS JOINT
BETWEEN M.S. RODS

FOR TENDER PURPOSE ONLY

DS	RD	RD	–	13.01.17
APPVD.	REVWD.	CHKD.	REV.	DATE

GROUNDING
NOTES & DETAILS

WEST BENGAL POWER DEVELOPMENT CORPN. LTD.
WEST BENGAL, INDIA

SAGARDIGHI THERMAL POWER EXTENSION PROJECT
PHASE–III, UNITS # 5 (1 x 660 MW)

DEVELOPMENT CONSULTANTS PVT. LTD.
CONSULTING ENGINEERS

JOB NO. 12A05 | SCALE : NTS

DWG. NO. 12A05–DWG–E–0600 | REV. -
SHT. 05 OF 26

12A05-DWG-E-0600 Sh. 5 OF 26 13.01.2017

A4_DD (9–96) [210x297]

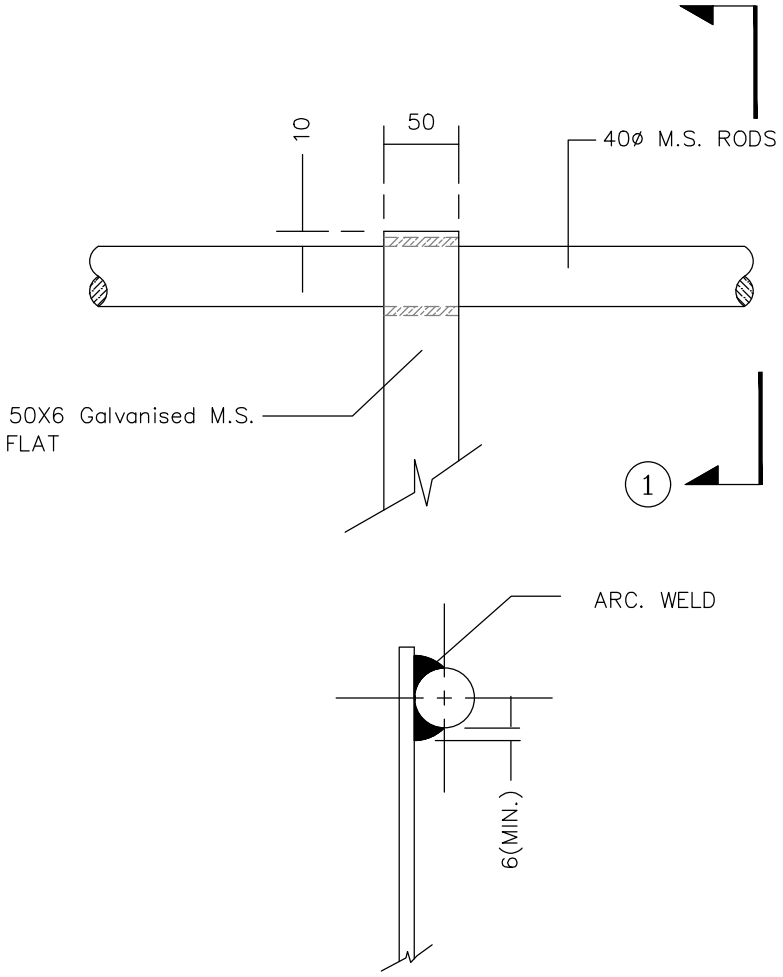

SECTION – 1

CROSS JOINT

FOR TENDER PURPOSE ONLY

DS	RD	RD	–	13.01.17
APPVD.	REVWD.	CHKD.	REV.	DATE

GROUNDING NOTES & DETAILS

WEST BENGAL POWER DEVELOPMENT CORPN. LTD.
WEST BENGAL, INDIA

SAGARDIGHI THERMAL POWER EXTENSION PROJECT
PHASE-III, UNITS # 5 (1 x 660 MW)

DEVELOPMENT CONSULTANTS PVT. LTD.
CONSULTING ENGINEERS

JOB NO. 12A05 | SCALE : NTS

DWG. NO. 12A05-DWG-E-0600 | REV. -
SHT. 06 OF 26

12A05-DWG-E-0600 Sh. 6 OF 26 13.01.2017

A4_DD (9-96) [210x297]

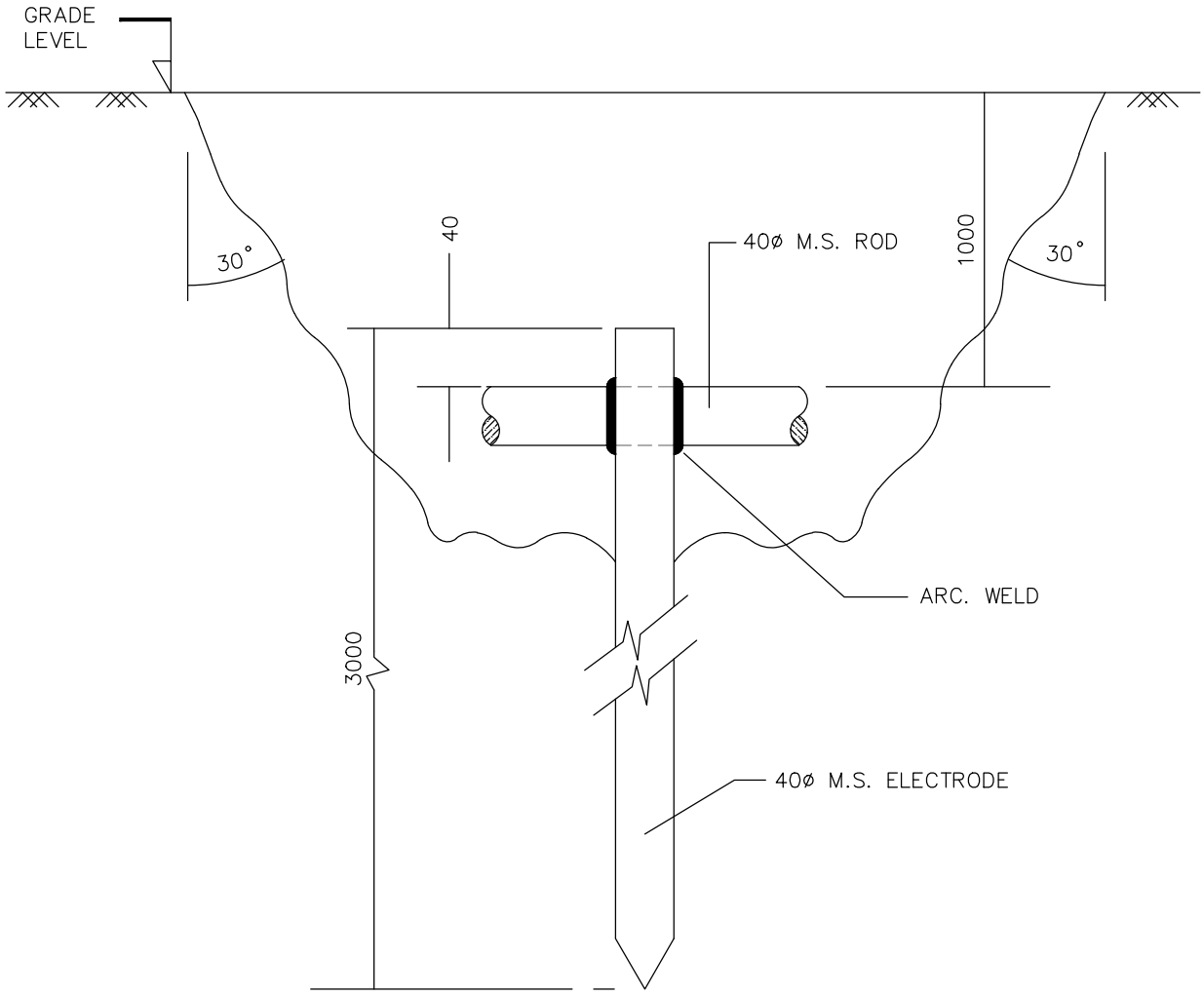

GROUND ELECTRODE

FOR TENDER PURPOSE ONLY

DS	RD	RD	–	13.01.17
APPVD.	REVWD.	CHKD.	REV.	DATE

GROUNDING
NOTES & DETAILS

WEST BENGAL POWER DEVELOPMENT CORPN. LTD.
WEST BENGAL, INDIA

SAGARDIGHI THERMAL POWER EXTENSION PROJECT
PHASE–III, UNITS # 5 (1 x 660 MW)

DEVELOPMENT CONSULTANTS PVT. LTD.
CONSULTING ENGINEERS

JOB NO. 12A05 | SCALE : NTS

DWG. NO. 12A05–DWG–E–0600 | REV. -
SHT. 07 OF 26

12A05-DWG-E-0600 Sh. 7 OF 26 13.01.2017

A4_DD (9–96) [210x297]

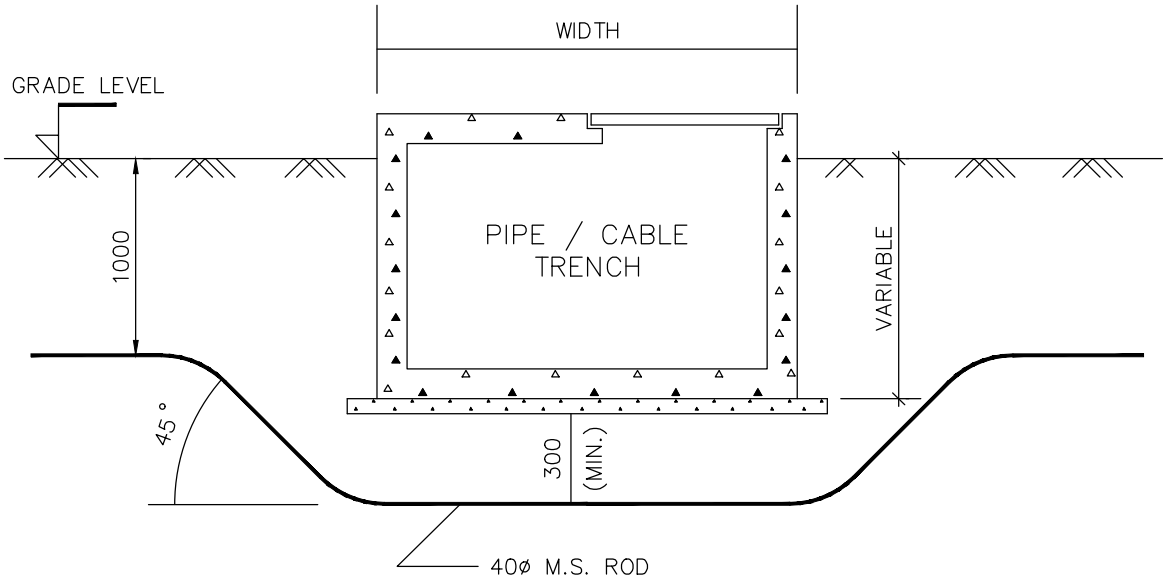

TRENCH CROSSING
OF GROUNDING CONDUCTOR

FOR TENDER PURPOSE ONLY

DS	RD	RD	–	13.01.17
APPVD.	REVWD.	CHKD.	REV.	DATE

GROUNDING
NOTES & DETAILS

WEST BENGAL POWER DEVELOPMENT CORPN. LTD.
WEST BENGAL, INDIA

SAGARDIGHI THERMAL POWER EXTENSION PROJECT
PHASE-III, UNITS # 5 (1 x 660 MW)

DEVELOPMENT CONSULTANTS PVT. LTD.
CONSULTING ENGINEERS

JOB NO. 12A05 | SCALE : NTS

DWG. NO. 12A05-DWG-E-0600 | REV. -
SHT. 08 OF 26

12A05-DWG-E-0600 Sh. 8 OF 26 13.01.2017
A4_DD (9-96) [210x297]

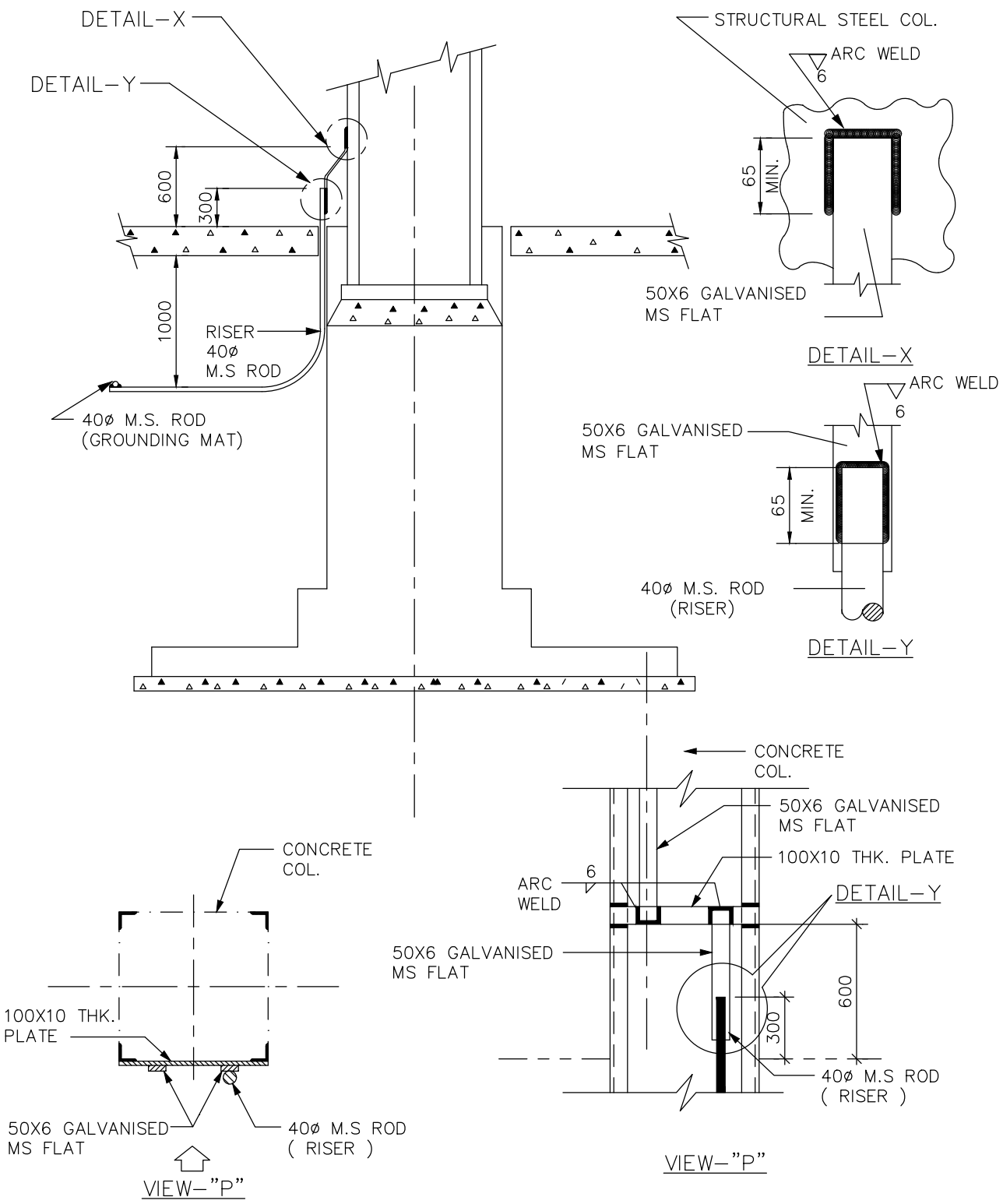

GROUNDING OF STEEL & CONCRETE COL.

FOR TENDER PURPOSE ONLY

DS	RD	RD	–	13.01.17
APPVD.	REVWD.	CHKD.	REV.	DATE

GROUNDING
NOTES & DETAILS

WEST BENGAL POWER DEVELOPMENT CORPN. LTD.
WEST BENGAL, INDIA

SAGARDIGHI THERMAL POWER EXTENSION PROJECT
PHASE–III, UNITS # 5 (1 x 660 MW)

DEVELOPMENT CONSULTANTS PVT. LTD.
CONSULTING ENGINEERS

JOB NO. 12A05 | SCALE : NTS

DWG. NO. 12A05–DWG–E–0600 | REV. -
SHT. 09 OF 26

12A05-DWG-E-0600 Sh. 9 OF 26 13.01.2017

A4_DD (9–96) [210x297]

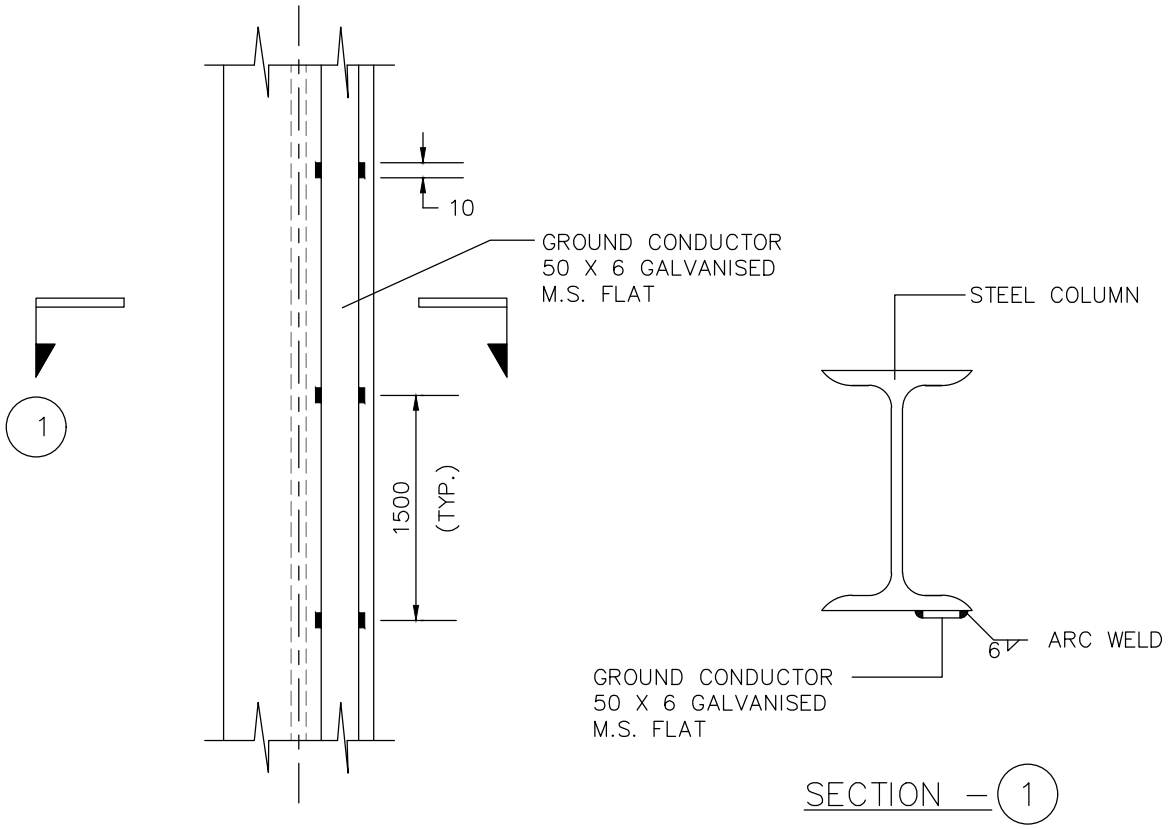

EARTHING CONDUCTOR
ALONG STEEL COLUMN

FOR TENDER PURPOSE ONLY

DS	RD	RD	–	13.01.17
APPVD.	REVWD.	CHKD.	REV.	DATE

GROUNDING
NOTES & DETAILS

WEST BENGAL POWER DEVELOPMENT CORPN. LTD.
WEST BENGAL, INDIA

SAGARDIGHI THERMAL POWER EXTENSION PROJECT
PHASE–III, UNITS # 5 (1 x 660 MW)

DEVELOPMENT CONSULTANTS PVT. LTD.
CONSULTING ENGINEERS

JOB NO. 12A05 | SCALE : NTS

DWG. NO. 12A05–DWG–E–0600 | REV. -
SHT. 10 OF 26

12A05-DWG-E-0600 Sh. 10 OF 26 13.01.2017

A4_DD (9–96) [210x297]

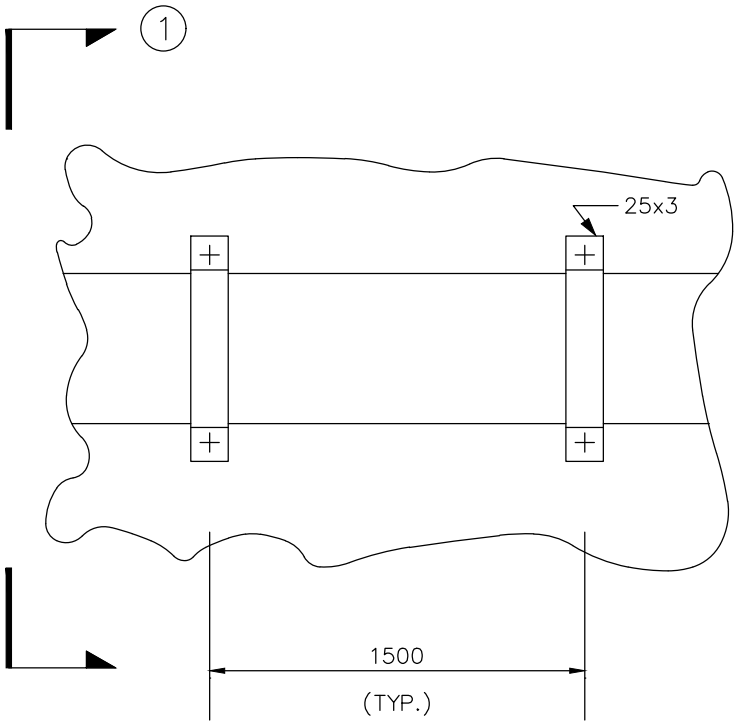

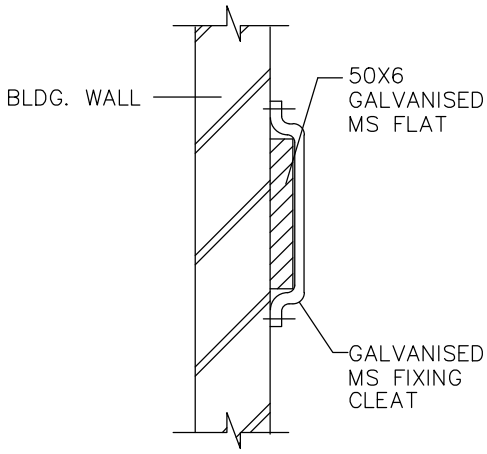

SECTION – 1

EARTHING CONDUCTOR
ALONG BUILDING WALL

FOR TENDER PURPOSE ONLY

DS	RD	RD	–	13.01.17
APPVD.	REVWD.	CHKD.	REV.	DATE

GROUNDING
NOTES & DETAILS

WEST BENGAL POWER DEVELOPMENT CORPN. LTD.
WEST BENGAL, INDIA

SAGARDIGHI THERMAL POWER EXTENSION PROJECT
PHASE–III, UNITS # 5 (1 x 660 MW)

DEVELOPMENT CONSULTANTS PVT. LTD.
CONSULTING ENGINEERS

JOB NO. 12A05 | SCALE : NTS

DWG. NO. 12A05–DWG–E–0600 | REV. -
SHT. 11 OF 26

12A05-DWG-E-0600 Sh. 11 OF 26 13.01.2017

A4_DD (9–96) [210x297]

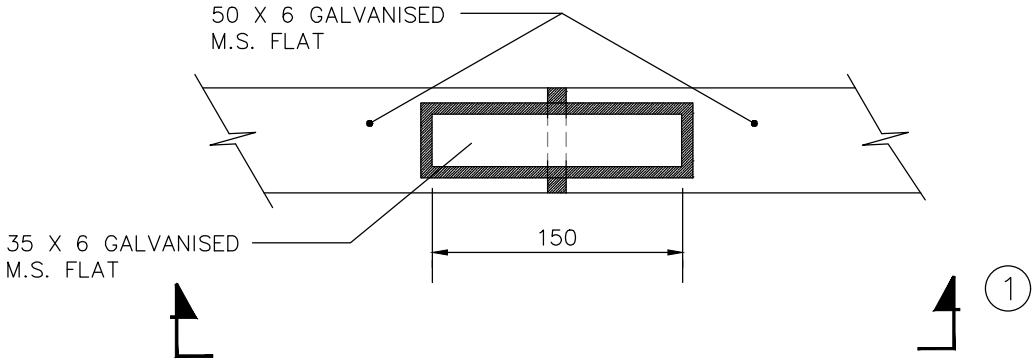

SECTION – 1

BUT JOINT
BETWEEN GALVANISED M.S. FLATS

FOR TENDER PURPOSE ONLY

DS	RD	RD	–	13.01.17
APPVD.	REVWD.	CHKD.	REV.	DATE

GROUNDING
NOTES & DETAILS

WEST BENGAL POWER DEVELOPMENT CORPN. LTD.
WEST BENGAL, INDIA

SAGARDIGHI THERMAL POWER EXTENSION PROJECT
PHASE–III, UNITS # 5 (1 x 660 MW)

DEVELOPMENT CONSULTANTS PVT. LTD.
CONSULTING ENGINEERS

JOB NO. 12A05 | SCALE : NTS

DWG. NO. 12A05–DWG–E–0600 | REV. -
SHT. 12 OF 26

12A05-DWG-E-0600 Sh. 12 OF 26 13.01.2017

A4_DD (9–96) [210x297]

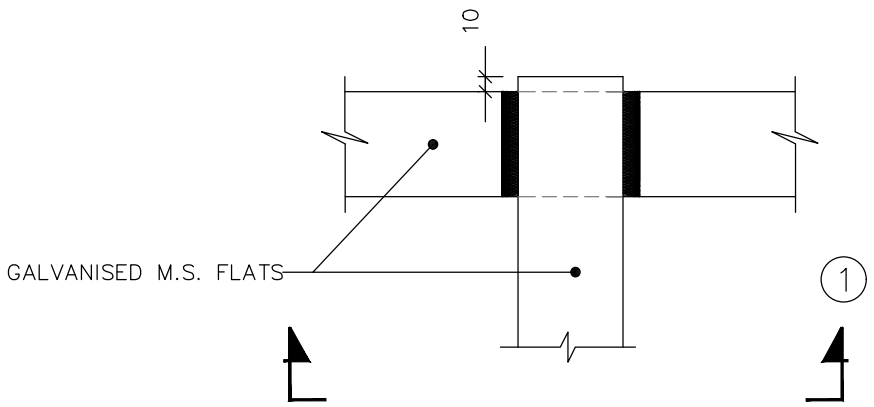

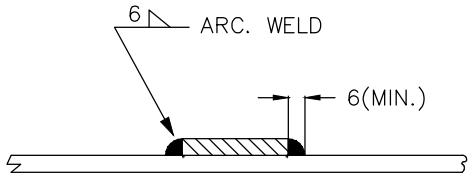

SECTION – 1

CROSS JOINT
BETWEEN GALVANISED M.S. FLATS

FOR TENDER PURPOSE ONLY

DS	RD	RD	–	13.01.17
APPVD.	REVWD.	CHKD.	REV.	DATE

GROUNDING
NOTES & DETAILS

WEST BENGAL POWER DEVELOPMENT CORPN. LTD.
WEST BENGAL, INDIA

SAGARDIGHI THERMAL POWER EXTENSION PROJECT
PHASE–III, UNITS # 5 (1 x 660 MW)

DEVELOPMENT CONSULTANTS PVT. LTD.
CONSULTING ENGINEERS

JOB NO. 12A05 | SCALE : NTS

DWG. NO. 12A05–DWG–E–0600 | REV. -
SHT. 13 OF 26

12A05-DWG-E-0600 Sh. 13 OF 26 13.01.2017

A4_DD (9–96) [210x297]

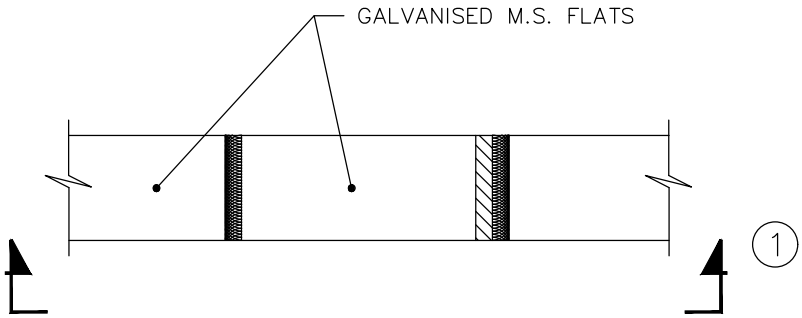

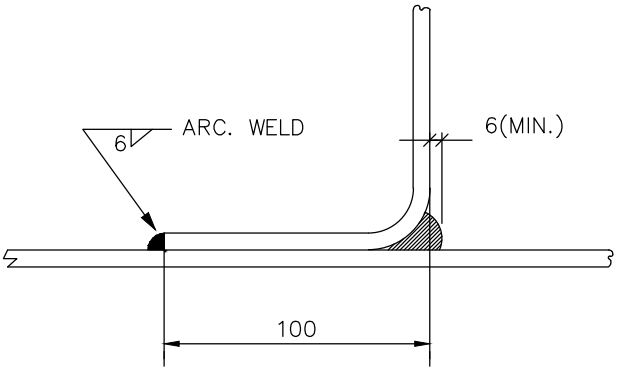

SECTION – 1

ANGULAR JOINT
BETWEEN GALVANISED M.S. FLATS

FOR TENDER PURPOSE ONLY

DS	RD	RD	–	13.01.17
APPVD.	REVWD.	CHKD.	REV.	DATE

GROUNDING
NOTES & DETAILS

WEST BENGAL POWER DEVELOPMENT CORPN. LTD.
WEST BENGAL, INDIA

SAGARDIGHI THERMAL POWER EXTENSION PROJECT
PHASE–III, UNITS # 5 (1 x 660 MW)

DEVELOPMENT CONSULTANTS PVT. LTD.
CONSULTING ENGINEERS

JOB NO. 12A05 | SCALE : NTS

DWG. NO. 12A05–DWG–E–0600 | REV. -
SHT. 14 OF 26

12A05-DWG-E-0600 Sh. 14 OF 26 13.01.2017

A4_DD (9–96) [210x297]

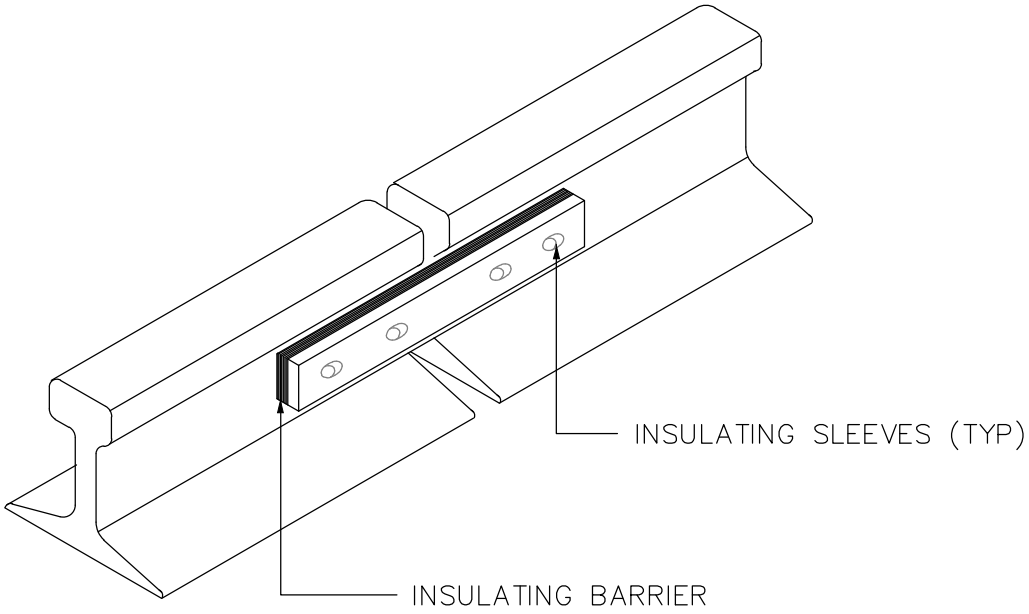

RAIL SECTIONS
LEAVING THE GROUND MAT

FOR TENDER PURPOSE ONLY

DS	RD	RD	–	13.01.17
APPVD.	REVWD.	CHKD.	REV.	DATE

GROUNDING
NOTES & DETAILS

WEST BENGAL POWER DEVELOPMENT CORPN. LTD.
WEST BENGAL, INDIA

SAGARDIGHI THERMAL POWER EXTENSION PROJECT
PHASE–III, UNITS # 5 (1 x 660 MW)

DEVELOPMENT CONSULTANTS PVT. LTD.
CONSULTING ENGINEERS

JOB NO. 12A05 | SCALE : NTS

DWG. NO. 12A05–DWG–E–0600 | REV. -
SHT. 15 OF 26

12A05-DWG-E-0600 Sh. 15 OF 26 13.01.2017

A4_DD (9–96) [210x297]

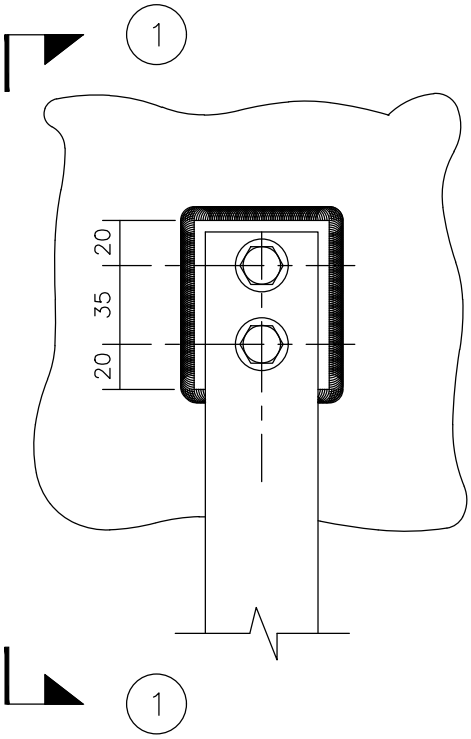

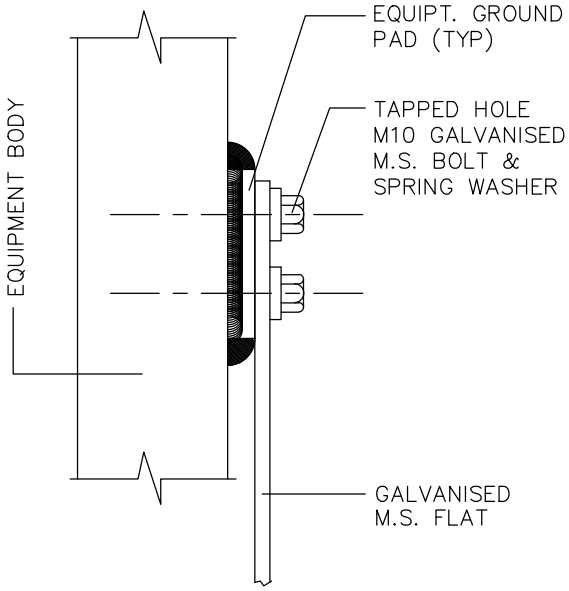

SECTION – 1 – 1

EQUIPMENT GROUNDING

FOR TENDER PURPOSE ONLY

DS	RD	RD	–	13.01.17
APPVD.	REVWD.	CHKD.	REV.	DATE

GROUNDING NOTES & DETAILS

WEST BENGAL POWER DEVELOPMENT CORPN. LTD.
WEST BENGAL, INDIA

SAGARDIGHI THERMAL POWER EXTENSION PROJECT
PHASE–III, UNITS # 5 (1 x 660 MW)

DEVELOPMENT CONSULTANTS PVT. LTD.
CONSULTING ENGINEERS

JOB NO. 12A05 | SCALE : NTS

DWG. NO. 12A05–DWG–E–0600 | REV. -
SHT. 16 OF 26

12A05-DWG-E-0600 Sh. 16 OF 26 13.01.2017

A4_DD (9–96) [210x297]

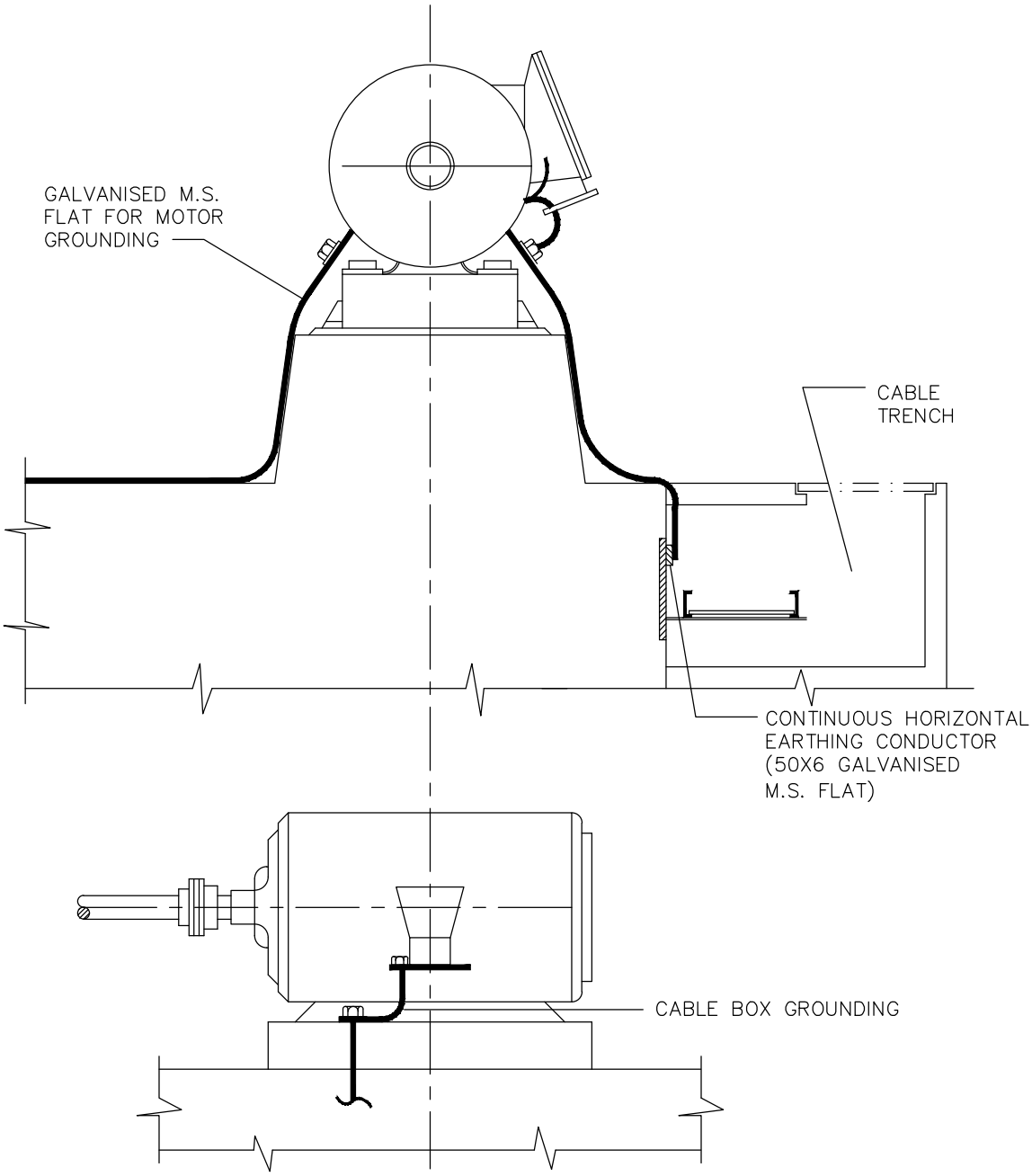

MOTOR GROUNDING

FOR TENDER PURPOSE ONLY

DS	RD	RD	–	13.01.17
APPVD.	REVWD.	CHKD.	REV.	DATE

GROUNDING
NOTES & DETAILS

WEST BENGAL POWER DEVELOPMENT CORPN. LTD.
WEST BENGAL, INDIA

SAGARDIGHI THERMAL POWER EXTENSION PROJECT
PHASE–III, UNITS # 5 (1 x 660 MW)

DEVELOPMENT CONSULTANTS PVT. LTD.
CONSULTING ENGINEERS

JOB NO. 12A05 | SCALE : NTS

DWG. NO. 12A05–DWG–E–0600 | REV. -
SHT. 17 OF 26

12A05-DWG-E-0600 Sh. 17 OF 26 13.01.2017

A4_DD (9–96) [210x297]

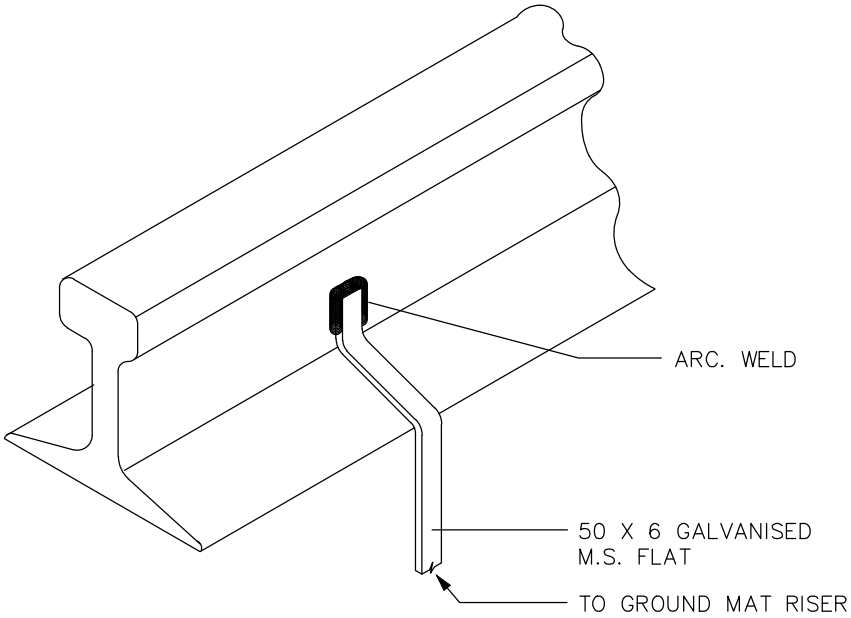

RAIL GROUNDING

FOR TENDER PURPOSE ONLY

DS	RD	RD	–	13.01.17
APPVD.	REVWD.	CHKD.	REV.	DATE

GROUNDING
NOTES & DETAILS

WEST BENGAL POWER DEVELOPMENT CORPN. LTD.
WEST BENGAL, INDIA

SAGARDIGHI THERMAL POWER EXTENSION PROJECT
PHASE–III, UNITS # 5 (1 x 660 MW)

DEVELOPMENT CONSULTANTS PVT. LTD.
CONSULTING ENGINEERS

JOB NO. 12A05 | SCALE : NTS

DWG. NO. 12A05–DWG–E–0600 | REV. -
SHT. 18 OF 26

12A05-DWG-E-0600 Sh. 18 OF 26 13.01.2017
A4_DD (9–96) [210x297]

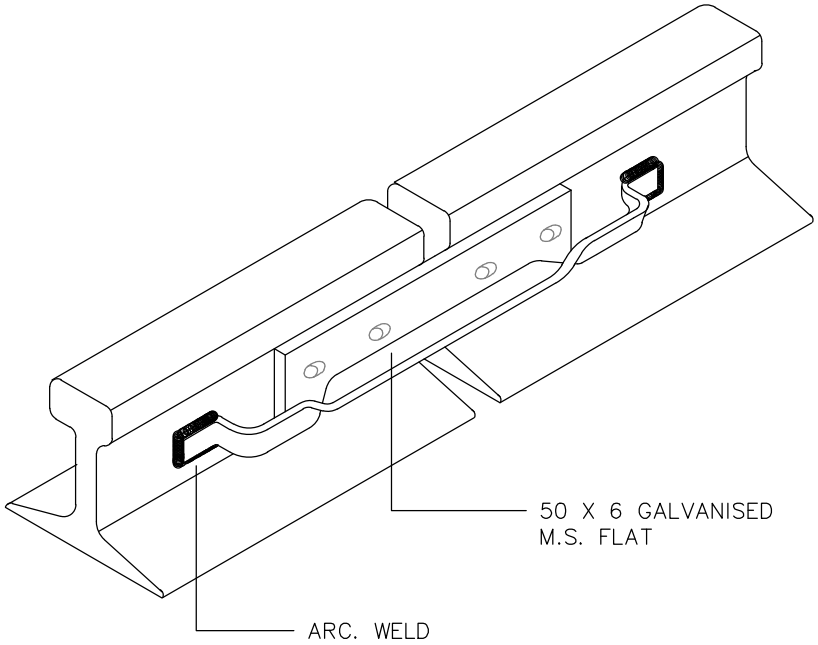

RAIL BONDING

FOR TENDER PURPOSE ONLY

DS	RD	RD	–	13.01.17
APPVD.	REVWD.	CHKD.	REV.	DATE

GROUNDING
NOTES & DETAILS

WEST BENGAL POWER DEVELOPMENT CORPN. LTD.
WEST BENGAL, INDIA

SAGARDIGHI THERMAL POWER EXTENSION PROJECT
PHASE–III, UNITS # 5 (1 x 660 MW)

DEVELOPMENT CONSULTANTS PVT. LTD.
CONSULTING ENGINEERS

JOB NO. 12A05 | SCALE : NTS

DWG. NO. 12A05–DWG–E–0600 | REV. -
SHT. 19 OF 26

12A05-DWG-E-0600 Sh. 19 OF 26 13.01.2017

A4_DD (9–96) [210x297]

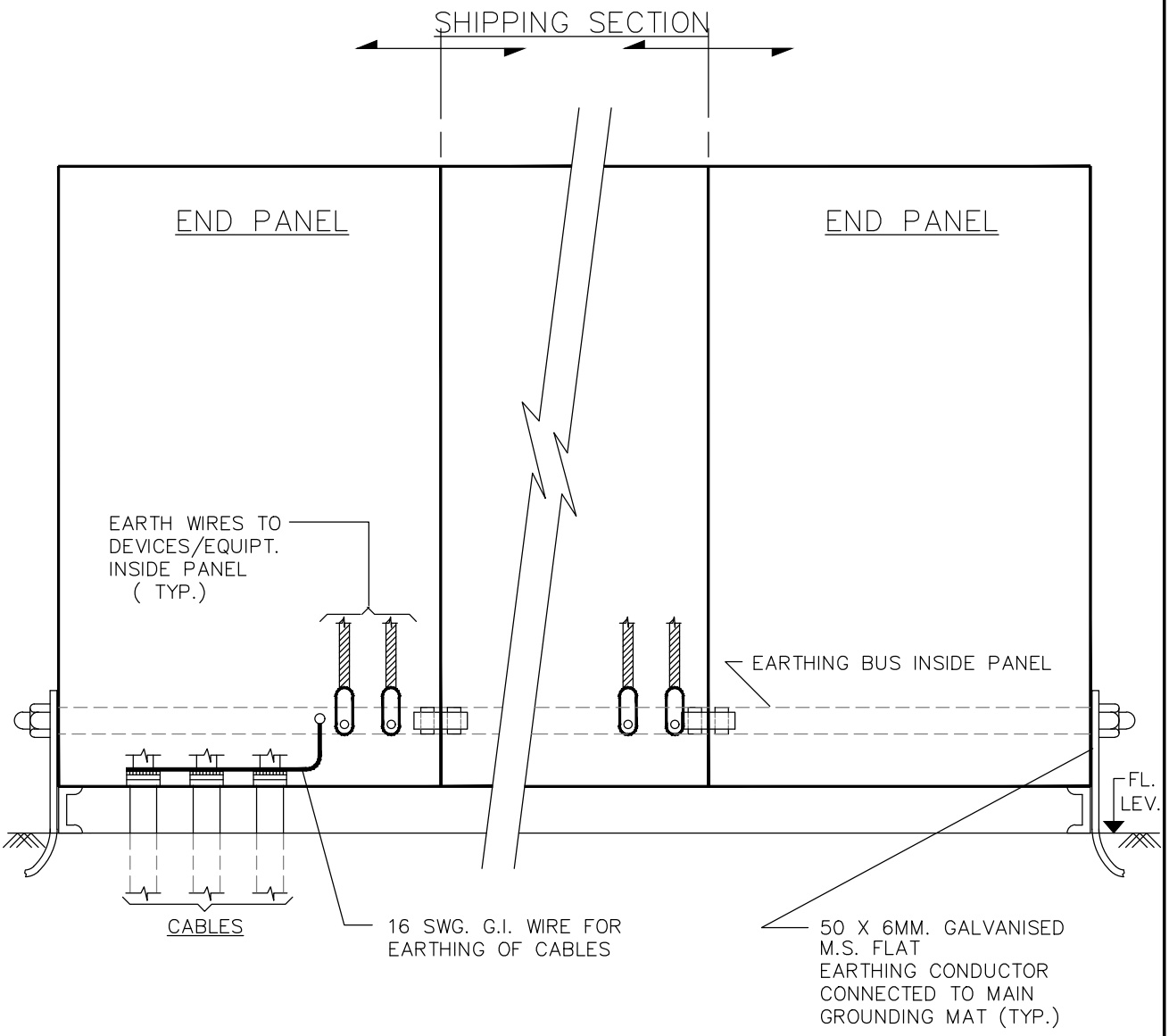

GROUNDING OF MCC, SWITCHGEAR

FOR TENDER PURPOSE ONLY

DS	RD	RD	–	13.01.17
APPVD.	REVWD.	CHKD.	REV.	DATE

GROUNDING NOTES & DETAILS

WEST BENGAL POWER DEVELOPMENT CORPN. LTD.
WEST BENGAL, INDIA

SAGARDIGHI THERMAL POWER EXTENSION PROJECT
PHASE-III, UNITS # 5 (1 x 660 MW)

DEVELOPMENT CONSULTANTS PVT. LTD.
CONSULTING ENGINEERS

JOB NO. 12A05 | SCALE : NTS

DWG. NO. 12A05-DWG-E-0600 SHT. 20 OF 26 | REV. -

12A05-DWG-E-0600 Sh. 20 OF 26 13.01.2017

A4_DD (9-96) [210x297]

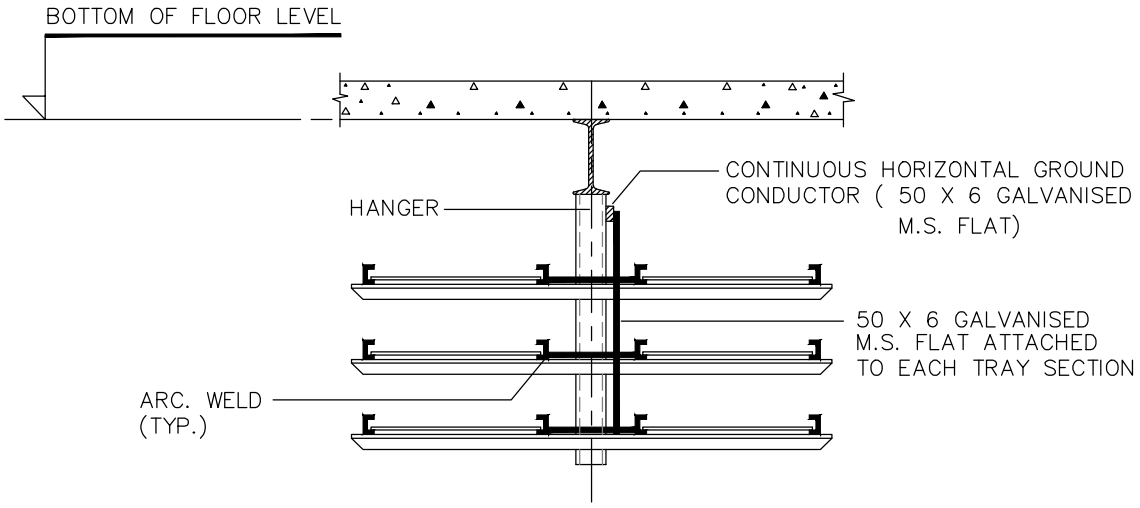

OVERHEAD CABLE TRAY GROUNDING

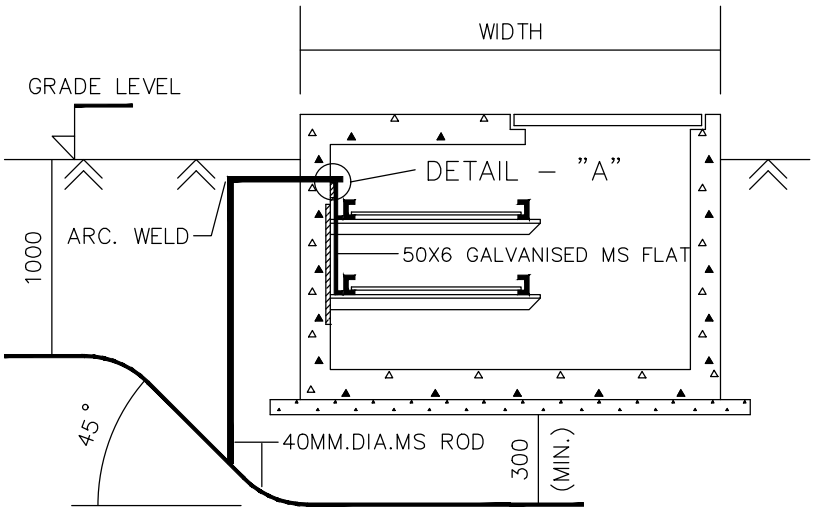

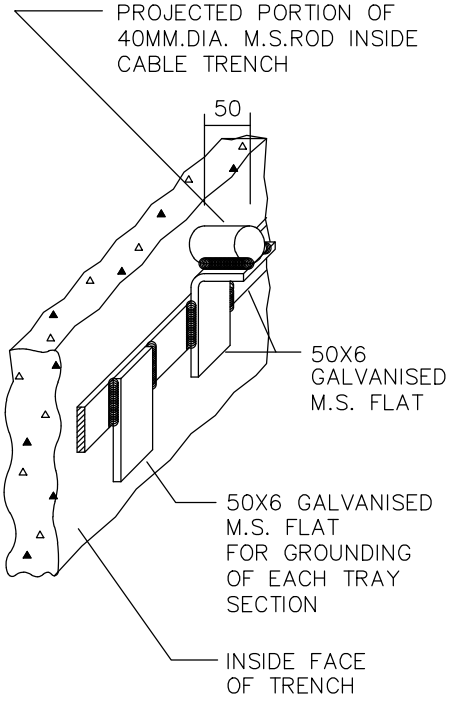

DETAIL – A

CABLE TRENCH GROUNDING

FOR TENDER PURPOSE ONLY

DS	RD	RD	–	13.01.17
APPVD.	REVWD.	CHKD.	REV.	DATE

GROUNDING NOTES & DETAILS

WEST BENGAL POWER DEVELOPMENT CORPN. LTD.
WEST BENGAL, INDIA

SAGARDIGHI THERMAL POWER EXTENSION PROJECT
PHASE–III, UNITS # 5 (1 x 660 MW)

DEVELOPMENT CONSULTANTS PVT. LTD.
CONSULTING ENGINEERS

JOB NO. 12A05 | SCALE : NTS

DWG. NO. 12A05–DWG–E–0600 | REV. -
SHT. 21 OF 26

12A05-DWG-E-0600 Sh. 21 OF 26 13.01.2017

A4_DD (9–96) [210x297]

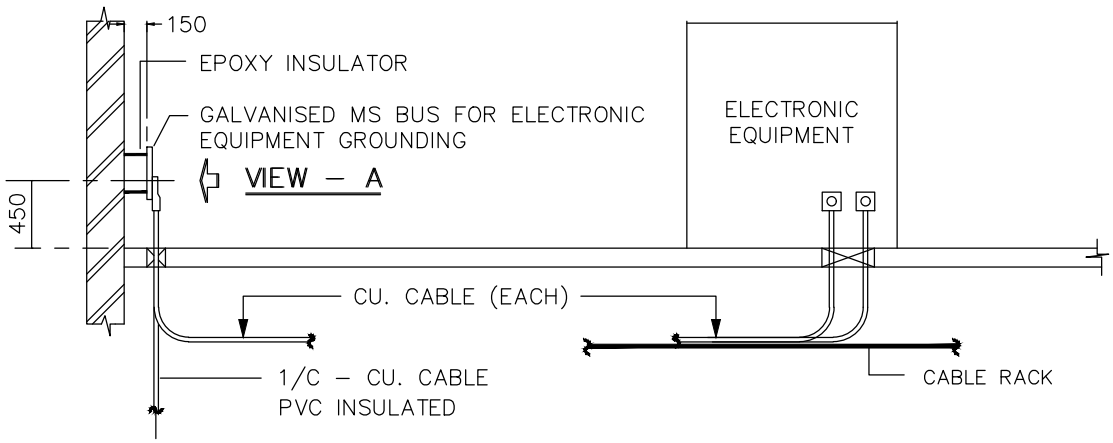

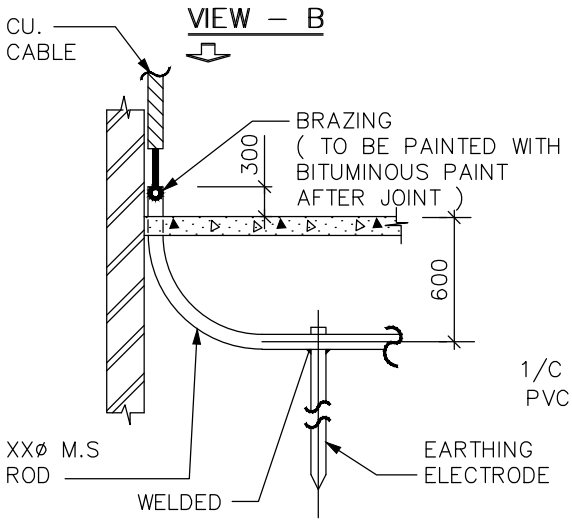

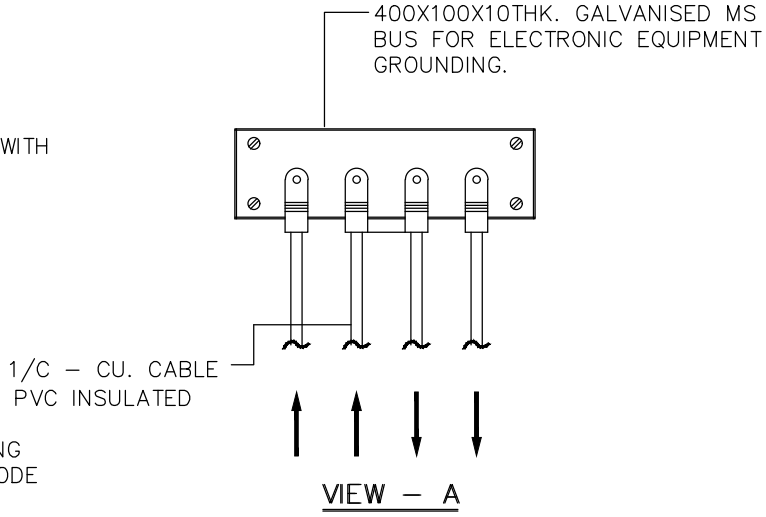

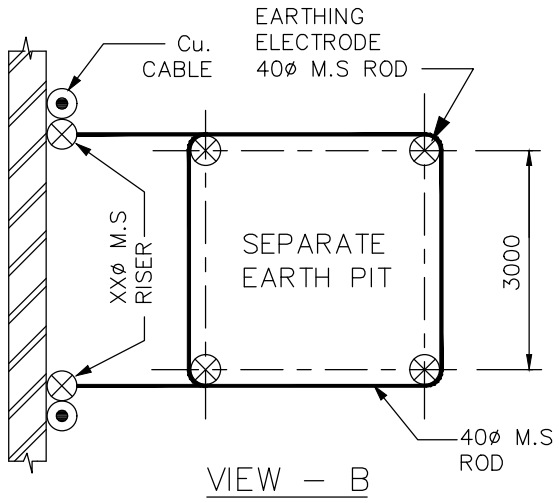

NOTES :

1. GALVANISED MS BUS SHALL BE MOUNTED ON INSULATOR BASE AT TWO SUITABLE LOCATIONS.
2. EACH ELECTRONIC EQUIPMENT/PANEL GROUND TERMINAL SHALL BE CONNECTED TO THE BUS BY MEANS OF CU. CABLE.
3. GROUND BUS SHALL IN TURN BE CONNECTED BY MEANS OF 2–1/C PVC INSULATED CU. CABLE TO SEPARATE EARTH PIT AT SUTABLE LOCATION.

ELECTRONIC EQUIPMENT GROUNDING.

FOR TENDER PURPOSE ONLY

DS	RD	RD	–	13.01.17
APPVD.	REVWD.	CHKD.	REV.	DATE

GROUNDING NOTES & DETAILS

WEST BENGAL POWER DEVELOPMENT CORPN. LTD.
WEST BENGAL, INDIA

SAGARDIGHI THERMAL POWER EXTENSION PROJECT
PHASE–III, UNITS # 5 (1 x 660 MW)

DEVELOPMENT CONSULTANTS PVT. LTD.
CONSULTING ENGINEERS

JOB NO. 12A05 | SCALE : NTS

DWG. NO. 12A05–DWG–E–0600 | REV. -
SHT. 22 OF 26

12A05-DWG-E-0600 Sh. 22 OF 26 13.01.2017

A4_DD (9–96) [210x297]

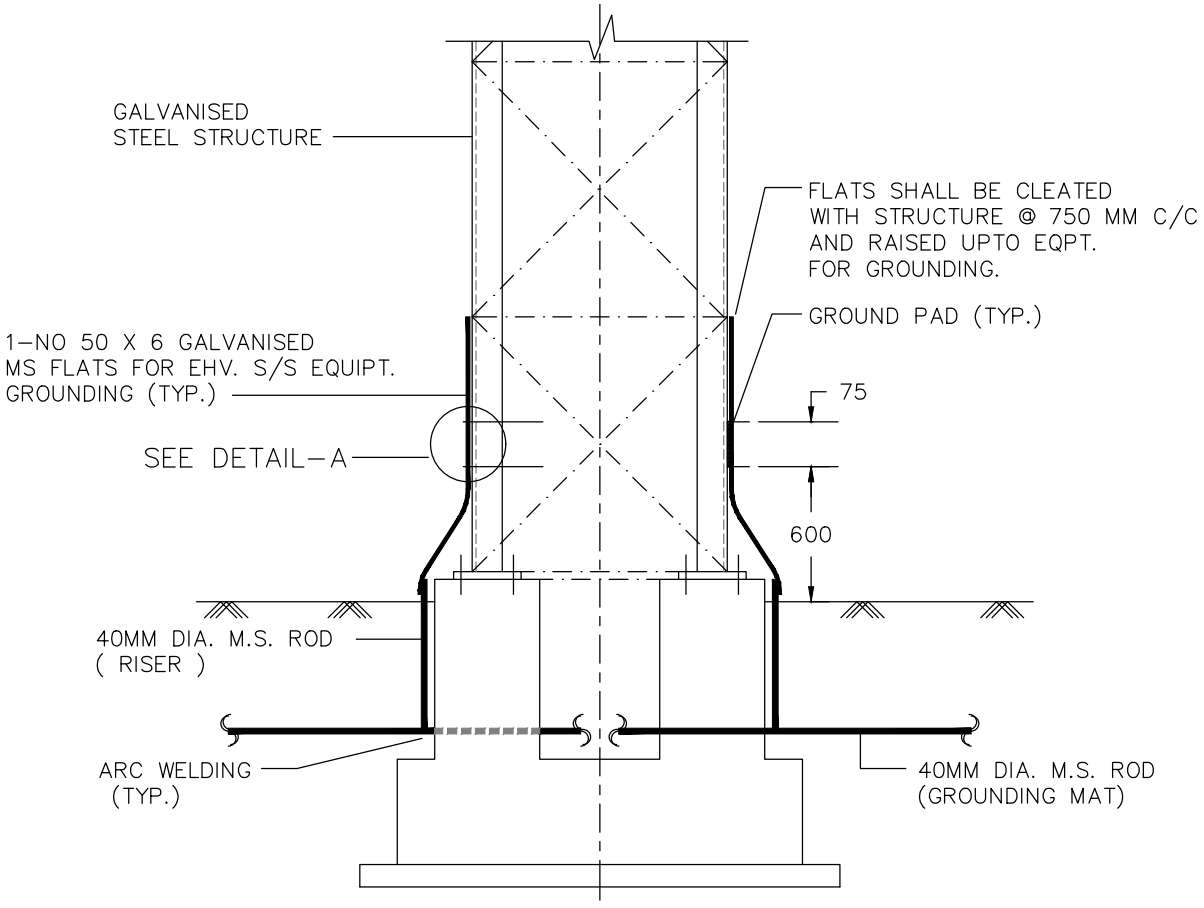

SECTION

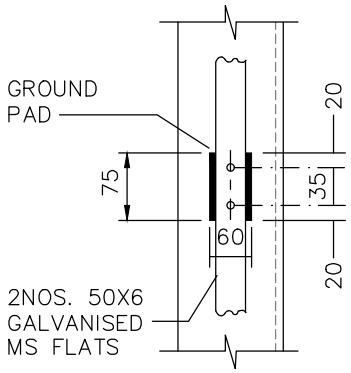

DETAIL – 'A'

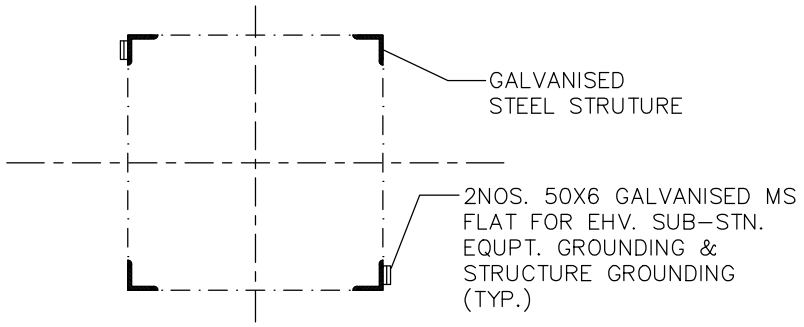

PLAN

GALVANISED STRUCTURE AND EQUIPMENT GROUNDING

FOR TENDER PURPOSE ONLY

DS	RD	RD	–	13.01.17
APPVD.	REVWD.	CHKD.	REV.	DATE

GROUNDING
NOTES & DETAILS

WEST BENGAL POWER DEVELOPMENT CORPN. LTD.
WEST BENGAL, INDIA

SAGARDIGHI THERMAL POWER EXTENSION PROJECT
PHASE–III, UNITS # 5 (1 x 660 MW)

DEVELOPMENT CONSULTANTS PVT. LTD.
CONSULTING ENGINEERS

JOB NO. 12A05 | SCALE : NTS

DWG. NO. 12A05–DWG–E–0600 | REV. -
SHT. 23 OF 26

12A05-DWG-E-0600 Sh. 23 OF 26 13.01.2017

A4_DD (9–96) [210x297]

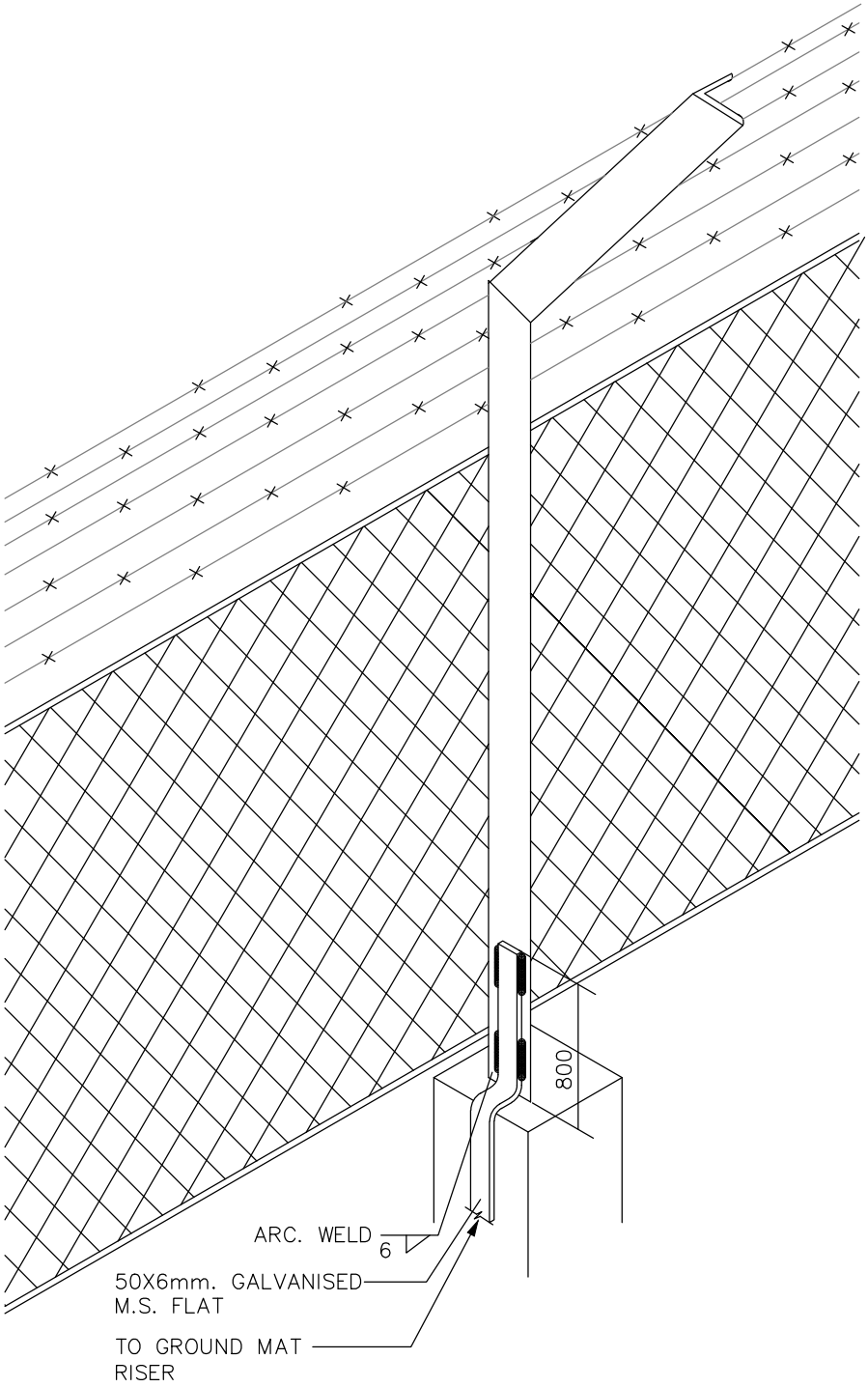

FENCE GROUNDING

FOR TENDER PURPOSE ONLY

DS	RD	RD	–	13.01.17
APPVD.	REVWD.	CHKD.	REV.	DATE

GROUNDING
NOTES & DETAILS

WEST BENGAL POWER DEVELOPMENT CORPN. LTD.
WEST BENGAL, INDIA

SAGARDIGHI THERMAL POWER EXTENSION PROJECT
PHASE–III, UNITS # 5 (1 x 660 MW)

DEVELOPMENT CONSULTANTS PVT. LTD.
CONSULTING ENGINEERS

JOB NO. 12A05 | SCALE : NTS

DWG. NO. 12A05–DWG–E–0600 | REV. -
SHT. 24 OF 26

12A05-DWG-E-0600 Sh. 24 OF 26 13.01.2017

A4_DD (9–96) [210x297]

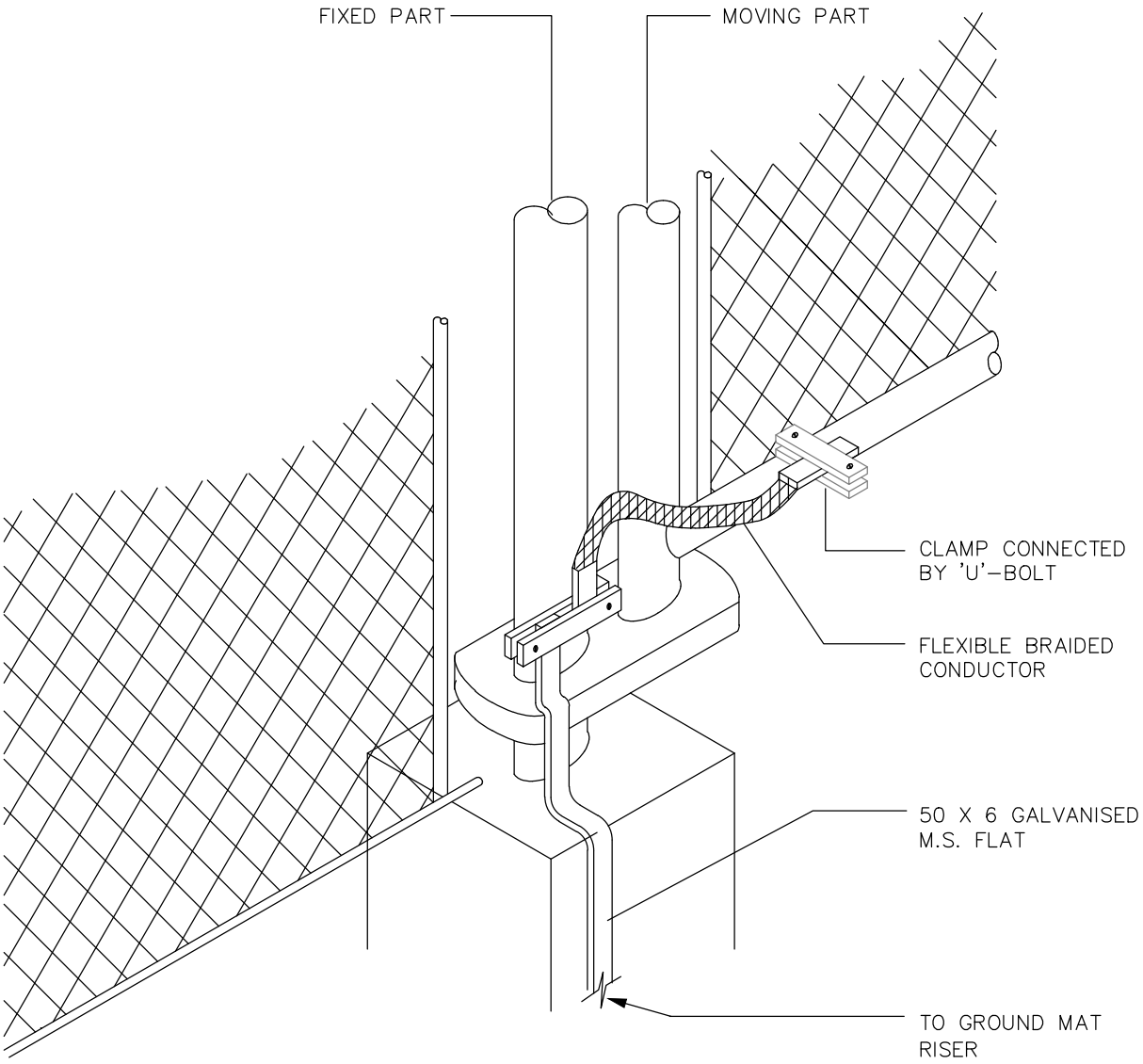

FENCE GATE GROUNDING

FOR TENDER PURPOSE ONLY

DS	RD	RD	–	13.01.17
APPVD.	REVWD.	CHKD.	REV.	DATE

GROUNDING NOTES & DETAILS

WEST BENGAL POWER DEVELOPMENT CORPN. LTD.
WEST BENGAL, INDIA

SAGARDIGHI THERMAL POWER EXTENSION PROJECT
PHASE-III, UNITS # 5 (1 x 660 MW)

DEVELOPMENT CONSULTANTS PVT. LTD.
CONSULTING ENGINEERS

JOB NO. 12A05 | SCALE : NTS

DWG. NO. 12A05-DWG-E-0600 | REV. -
SHT. 25 OF 26

12A05-DWG-E-0600 Sh. 25 OF 26 13.01.2017

A4_DD (9-96) [210x297]

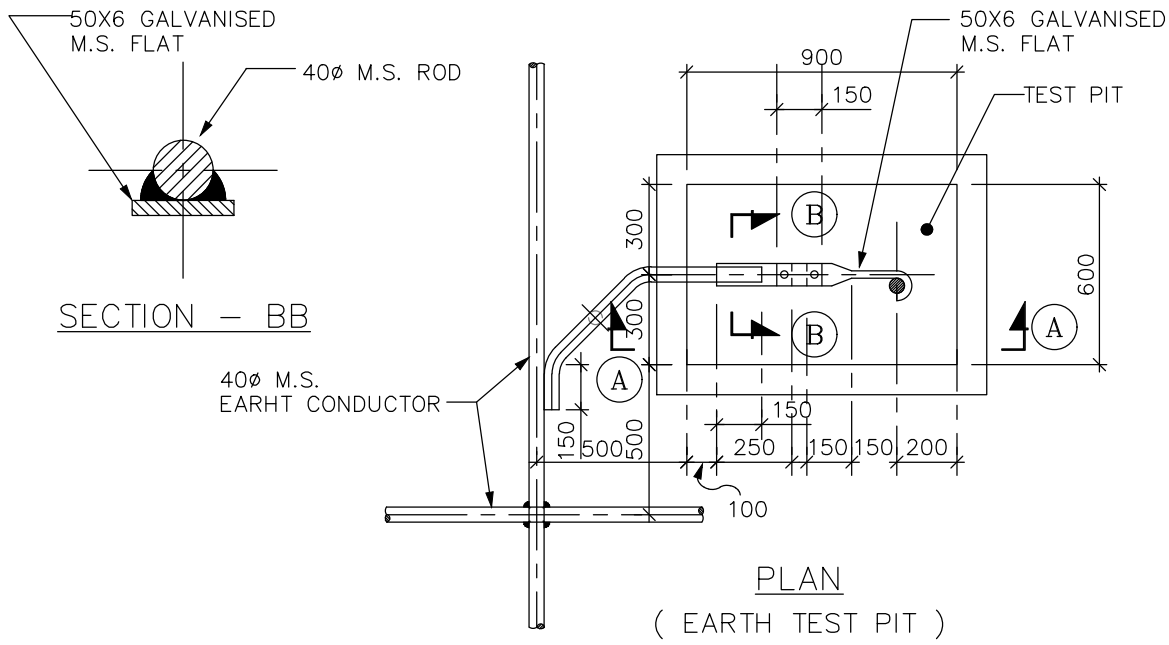

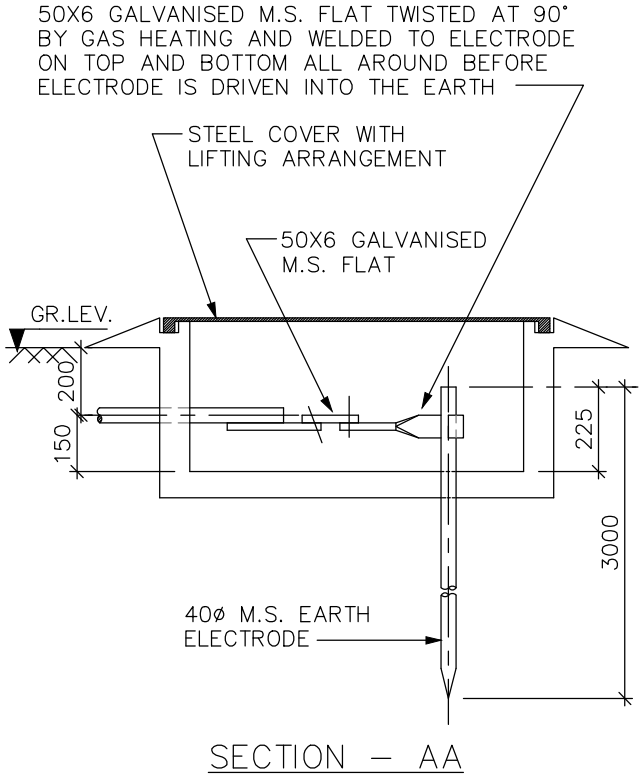

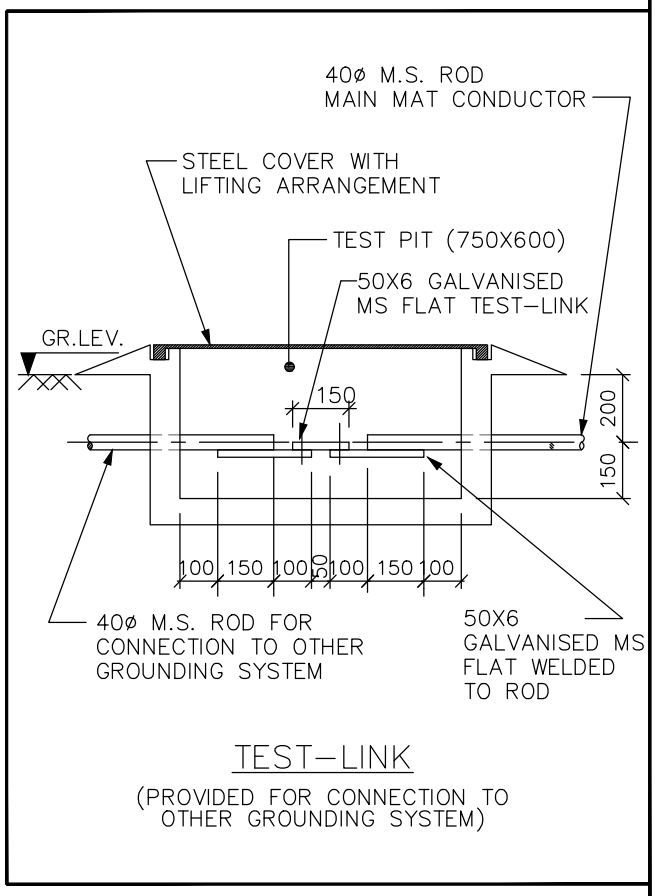

FOR TENDER PURPOSE ONLY

DS	RD	RD	–	13.01.17
APPVD.	REVWD.	CHKD.	REV.	DATE

GROUNDING
NOTES & DETAILS

WEST BENGAL POWER DEVELOPMENT CORPN. LTD.
WEST BENGAL, INDIA

SAGARDIGHI THERMAL POWER EXTENSION PROJECT
PHASE–III, UNITS # 5 (1 x 660 MW)

DEVELOPMENT CONSULTANTS PVT. LTD.
CONSULTING ENGINEERS

JOB NO. 12A05 | SCALE : NTS

DWG. NO. 12A05–DWG–E–0600 | REV. -
SHT. 26 OF 26

12A05-DWG-E-0600 Sh. 26 OF 26 13.01.2017

A4_DD (9–96) [210x297]

LIGHTNING PROTECTION NOTES & DETAILS

DWG. NO. 12A05-DWG-E-1000

FOR TENDER PURPOSE ONLY

12A05-DWG-E-1000 Sht. Cover 13.01.2017

A4_DD (9-96) [210x297]

1.0 AIR TERMINATIONS

1.1 Vertical air terminal rods shall be installed on the top of all structured/buildings to be protected from lightning strokes.

1.2 Vertical air terminal except those for chimney shall be 20 mm dia galvanised steel rods. The projected length of the rods including mounting structure, if any, shall be as required to protect the objects, from lightning stroke. Air terminal rods provided on top of chimney/ stack for lightning protection shall be 20 mm dia lead coated solid copper rods.

1.3 Air terminal rods shall be properly fixed on top of buildings/ structures to withstand wind pressure.In case the air terminal rods are embedded in the building roof, the portion embedded in the contrete shall not touch the reinforcement bars and shall be duely insulated from them.

1.4 All vertical air terminal rods shall be electrically connected by means of horizontal conductors (galvanised MS flats) of size 50 x 6 mm.

1.5 The shielding angle for one vertical air termination shall be 45 degrees. For more than one rod, shielding angle between the rods shall be taken as 60 degrees.

1.6 Horizontal air terminations (galvanised MS flats) shall be so laid out that no part of the roof is more than nine (9) metres away from the nearest Horizonal air terminals.

2.0 SHIELDING MASTS

2.1 The shielding mast for lightning protection shall be installed on top of the steel column cap plates of power house main building.

2.2 The shielding masts shall be made of galvanished steel pipe and the heights of the same shall be decided considering the zones to be protected.

2.3 Each shielding mast shall be connected to grounding grid of the station by a 50 x 6 mm. galvanised MS down conductor running along the building column. In addition, all power house building column joints shall be electrically bonded.

3.0 DOWN CONDUCTORS

3.1 The down conductors shall be 50 x 6 mm galvanished MS flats. However, The down conductor of conveyor gallery may be 25 x 4 mm galvanised MS flats.

One end of these flats shall be connected to the air terminal rods/ horizontal conductors on top of roof/structure and the other end to the nearest earth terminals.

3.2 Each down conductor shall have an independent earth termination. In no case conductors of the lightning protection system shall be connected with the conductors of the grounding system above ground

FOR TENDER PURPOSE ONLY

DS	RD	RD	–	13.01.17
APPVD.	REVWD	CHKD	REV.	DATE

GENERAL NOTES & DETAILS
LIGHTNING PROTECTION SYSTEM

WEST BENGAL POWER DEVELOPMENT CORPN. LTD.
WEST BENGAL, INDIA

SAGARDIGHI THERMAL POWER EXTENSION PROJECT
PHASE–III, UNITS # 5 (1 x 660 MW)

DEVELOPMENT CONSULTANTS PVT. LTD.
CONSULTING ENGINEERS
KOLKATA MUMBAI CHENNAI NEW DELHI

JOB NO. 12A05 | SCALE : NTS

DWG. NO. 12A05–DWG–E–1000 | REV. -
SHT. 01 OF 12

12A05-DWG-E-1000 Sh. 1 OF 12 13.01.2017

A4_DD (9–96) [210x297]

3.3 The connetion between each down conductor and earth terminal shall be made via test link located at approximately 1500 mm above ground level.

3.4 The down conductors shall be laid straight and sharp bends shall be avoided as far as practicable. These shall be cleated on the outside of the building wall and or columns/structures at intervals of about 750 mm., unless indicated otherwise in the drawings.

3.5 Down conductors along the chimney shell shall be electrically connected with the reinforcement rods by suitable lugs welded (6 mm fillet) to both down conductor and reinforcement at the interval of 30 mm.

3.6 All exposed metallic parts of a building shall be bonded to the down conductors. Such parts shall include ladders, balconies, conduits etc.

4.0 EARTH TERMINALS.

4.1 Where ground mat is available, the risers specifically ear-marked for lightning protection shall be considered as Earth Terminal. In such case, one electrode shall be provide close to the each Earth Terminals.

4.2 Where ground mat is not available sparate earth pit as per IS-3043 or approved international standard specifically for lightning protection shall be provided as Earth Terminal.

5.0 JOINTING & CONNECTION

5.1 Number of joints in the lightning conductors shall be kept to a minimum.

5.2 All the joints shall be done by arc welding process. Overlapping of conductors at straight joints shall not be less than 150 mm. The contact surfaces shall be properly cleaned before jointing.

5.3 Those portions of galvanished steel flats, which have been welded at site, shall be coated with two (2) coats of cold galvanising anti-corrosive paint after welding.

5.4 After successful testing the bolted joints of test links shall be wrapped by bitumenons hessian tape followed by 3 mm thick coating of bitumen compound.

5.5 Air terminal rods and shielding masts shall be coated with weather resistant anti-corrosive paint (zinc chromate followed by two coats of aluminium paint).

5.6 Steel to copper connection shall be brazed type.

FOR TENDER PURPOSE ONLY

DS	RD	RD	–	13.01.17
APPVD.	REVWD	CHKD	REV.	DATE

GENERAL NOTES & DETAILS
LIGHTNING PROTECTION SYSTEM

WEST BENGAL POWER DEVELOPMENT CORPN. LTD.
WEST BENGAL, INDIA

SAGARDIGHI THERMAL POWER EXTENSION PROJECT
PHASE–III, UNITS # 5 (1 x 660 MW)

DEVELOPMENT CONSULTANTS PVT. LTD.
CONSULTING ENGINEERS
KOLKATA MUMBAI CHENNAI NEW DELHI

JOB NO. 12A05 | SCALE : NTS

DWG. NO. 12A05–DWG–E–1000 | REV. -
SHT. 02 OF 12

12A05-DWG-E-1000 Sh. 2 OF 12 13.01.2017
A4_DD (9–96) [210x297]

6.0 LIGHTING PROTECTION OF OUTDOOR SUBSTATION/ SWITCHYARD AND OTHER AREAS.

6.1 Lightning protection of outdoor switchyards/substations shall be done by lightning masts on top of steel towers. shield wires may also be used wherever required. These shall be strung across the top of the steel towers and/or building/plant structure.

6.2 The shield wire, which shall be brought down to the bottom of the steel towers, shall be connected to the earthing conductor (50 x 6 mm galvanished MS flat), which in turn, shall be connected to the riser from the main grounding mat/grid.

6.3 For lightning protection of conveyor gallery, a horizontal conductor (25 x3 mm galvanised MS flat) running along the entire length of the conveyor gallery shall be provided on top of the gallery roof. This conductor be connected to a earth terminal at approximate intervals of 30M by two down conductors, each 25 x 3 mm galvanised MS flat.

7.0 The sizes and materials of earthing conductors used in lightning protection system are listed below :

	DESCRIPTION		SIZE	MATERIAL
a)	Vertical Air Terminals		20 mm dia rod	Galvanished Mild steel
b)	Horizontal conductors	i)	50 x 6 mm Flat	Galvanished Mild steel
		ii)	25 x 4 mm Flat	Galvanished Mild steel
c)	Down Conductors	i)	50 x 6 mm Flat	Galvanished Mild steel
		ii)	25 x 4 mm Flat	Galvanished Mild steel
d)	Riser From Electrode/ Grounding Mat		32 mm dia Rod	Mild Steel
e)	Electrode for Lighting Protection		32 mm dia Rod 3000 mm long	Mild Steel

FOR TENDER PURPOSE ONLY

DS	RD	RD	–	13.01.17
APPVD.	REVWD	CHKD	REV.	DATE

GENERAL NOTES & DETAILS
LIGHTNING PROTECTION SYSTEM

WEST BENGAL POWER DEVELOPMENT CORPN. LTD.
WEST BENGAL, INDIA

SAGARDIGHI THERMAL POWER EXTENSION PROJECT
PHASE–III, UNITS # 5 (1 x 660 MW)

DEVELOPMENT CONSULTANTS PVT. LTD.
CONSULTING ENGINEERS
KOLKATA MUMBAI CHENNAI NEW DELHI

JOB NO. 12A05 | SCALE : NTS

DWG. NO. 12A05–DWG–E–1000 | REV. -
SHT. 03 OF 12

12A05-DWG-E-1000 Sh. 3 OF 12 13.01.2017

A4_DD (9–96) [210x297]

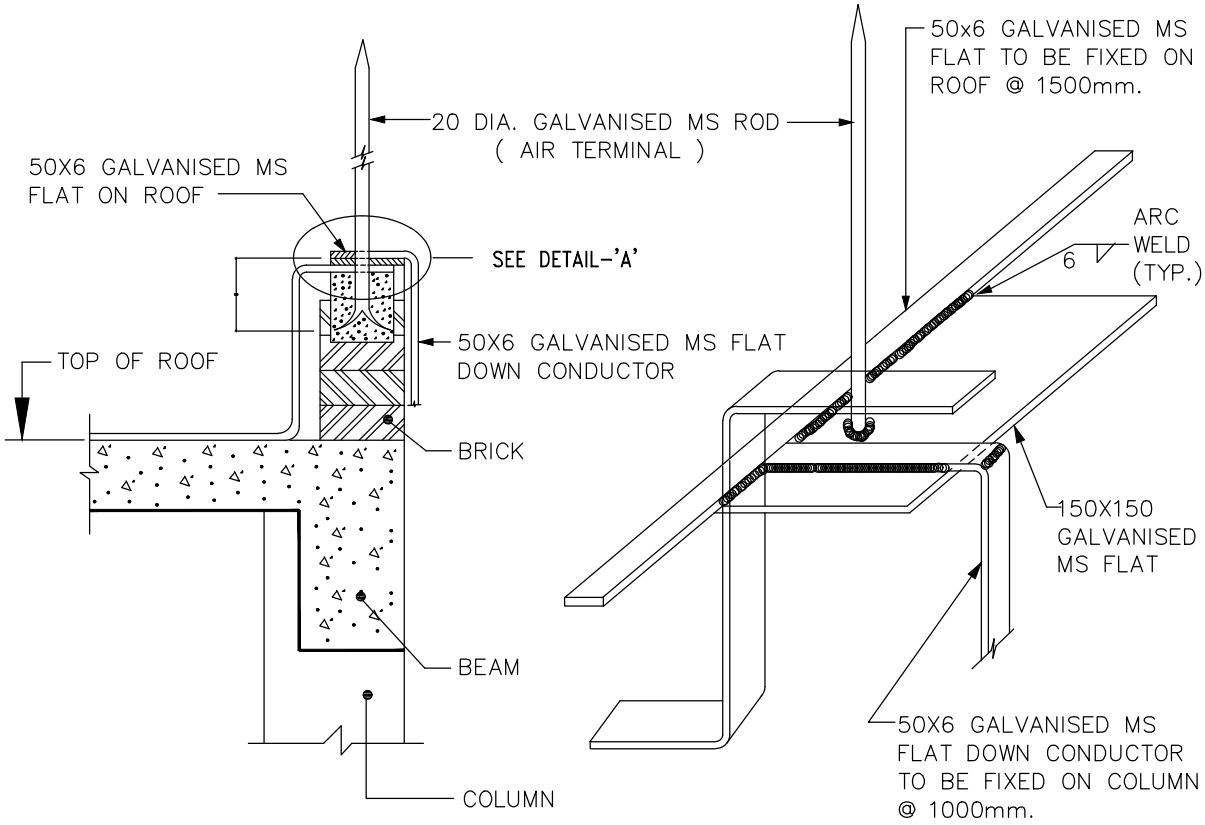

DETAIL – 'A'

FIXING DETAILS OF AIR TERMINAL ROD ON BUILDING ROOF

(FOR LIGHTNING PROTECTION)

FOR TENDER PURPOSE ONLY

DS	RD	RD	–	13.01.17	
APPVD.	REVWD	CHKD	REV.	DATE	

GENERAL NOTES & DETAILS
LIGHTNING PROTECTION SYSTEM

WEST BENGAL POWER DEVELOPMENT CORPN. LTD.
WEST BENGAL, INDIA

SAGARDIGHI THERMAL POWER EXTENSION PROJECT
PHASE–III, UNITS # 5 (1 x 660 MW)

DEVELOPMENT CONSULTANTS PVT. LTD.
CONSULTING ENGINEERS
KOLKATA MUMBAI CHENNAI NEW DELHI

JOB NO. 12A05 | SCALE : NTS

DWG. NO. 12A05–DWG–E–1000 | REV. -
SHT. 04 OF 12

12A05-DWG-E-1000 Sh. 4 OF 12 13.01.2017

A4_DD (9–96) [210x297]

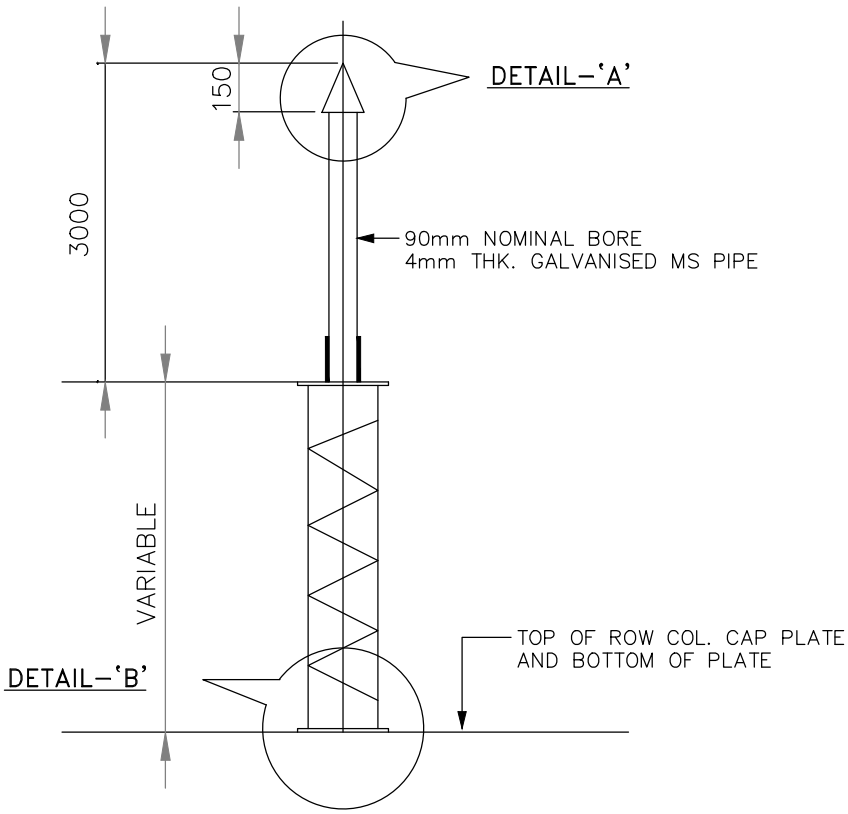

SHIELDING MAST

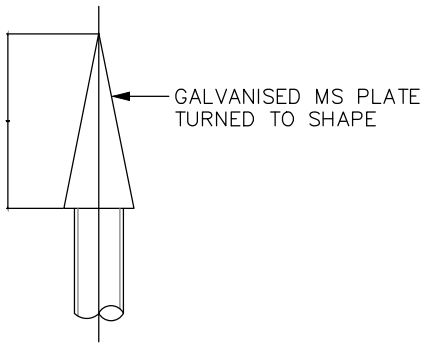

DETAIL – A

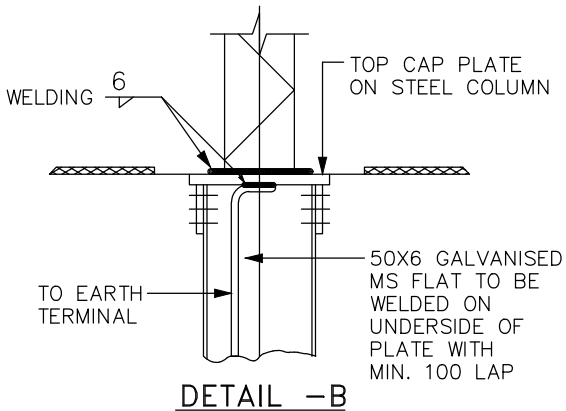

DETAIL –B

FIXING DETAILS OF SHIELDING MAST ON TOP OF STEEL COLUMNS OF POWER HOUSE BUILDING (FOR LIGHTNING PROTECTION)

FOR TENDER PURPOSE ONLY

DS	RD	RD	–	13.01.17	
APPVD.	REVWD	CHKD	REV.	DATE	

GENERAL NOTES & DETAILS
LIGHTNING PROTECTION SYSTEM

WEST BENGAL POWER DEVELOPMENT CORPN. LTD.
WEST BENGAL, INDIA

SAGARDIGHI THERMAL POWER EXTENSION PROJECT
PHASE–III, UNITS # 5 (1 x 660 MW)

DEVELOPMENT CONSULTANTS PVT. LTD.
CONSULTING ENGINEERS
KOLKATA MUMBAI CHENNAI NEW DELHI

JOB NO. 12A05 | SCALE : NTS

DWG. NO. 12A05–DWG–E–1000 | REV. -
SHT. 05 OF 12

12A05-DWG-E-1000 Sh. 5 OF 12 13.01.2017

A4_DD (9–96) [210x297]

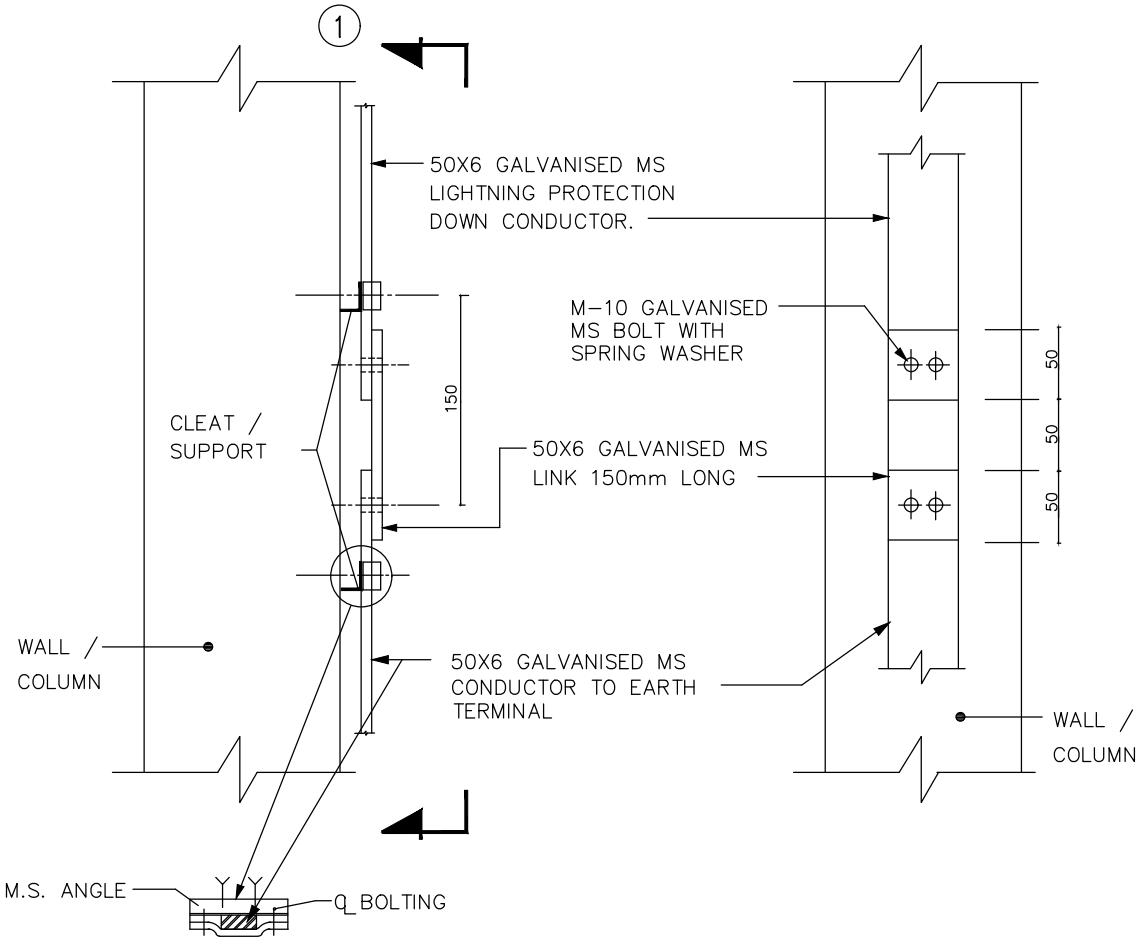

CLEATING ARRANGEMENT

SECTION – 1

TEST LINK POINT / CLEATING ARRANGEMENT

NOTE :–

LINK POINT TO BE MOUNTED AT A HEIGHT
OF 1.5M ABOVE GROUND LEVEL

FOR TENDER PURPOSE ONLY

DS	RD	RD	–	13.01.17
APPVD.	REVWD	CHKD	REV.	DATE

GENERAL NOTES & DETAILS
LIGHTNING PROTECTION SYSTEM

WEST BENGAL POWER DEVELOPMENT CORPN. LTD.
WEST BENGAL, INDIA

SAGARDIGHI THERMAL POWER EXTENSION PROJECT
PHASE–III, UNITS # 5 (1 x 660 MW)

DEVELOPMENT CONSULTANTS PVT. LTD.
CONSULTING ENGINEERS
KOLKATA MUMBAI CHENNAI NEW DELHI

JOB NO. 12A05 | SCALE : NTS

DWG. NO. 12A05–DWG–E–1000 | REV. -
SHT. 06 OF 12

12A05-DWG-E-1000 Sh. 6 OF 12 13.01.2017

A4_DD (9–96) [210x297]

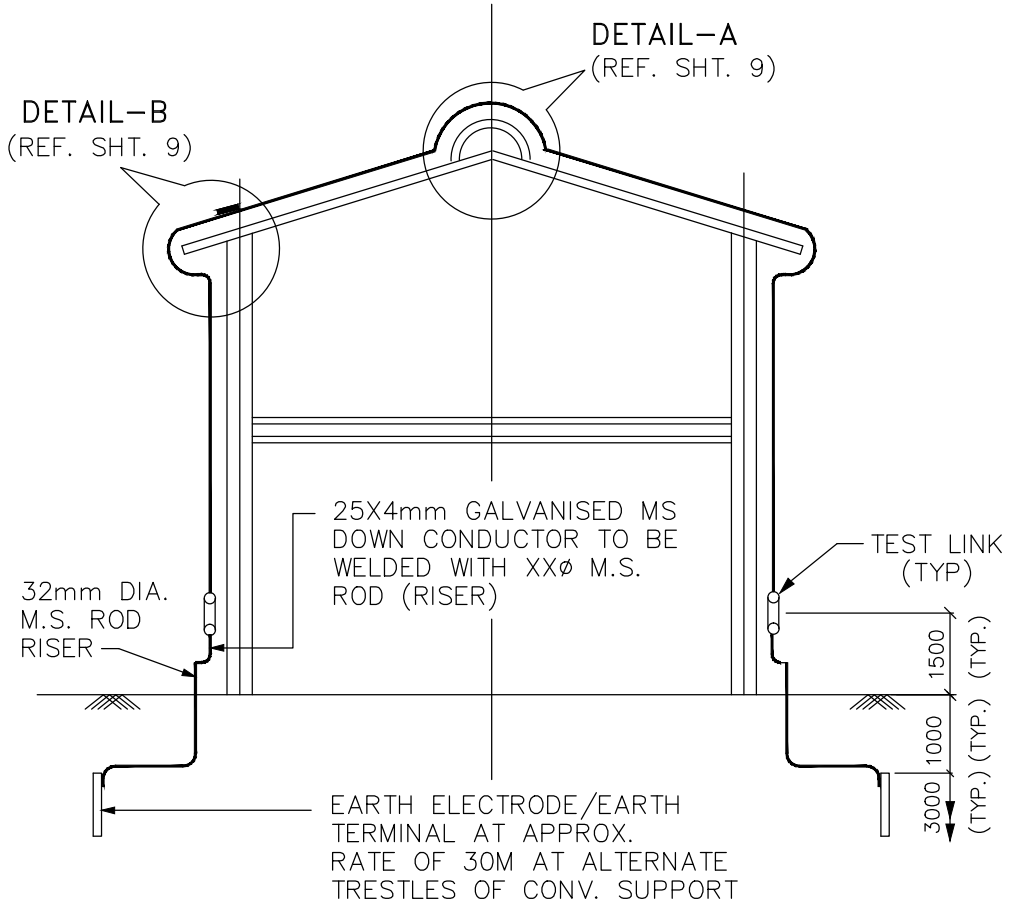

SECTION

(TYPICAL ARRANGEMENT OF DOWN CONDUCTOR FOR CONV. GALLERY)

FOR TENDER PURPOSE ONLY

DS	RD	RD	–	13.01.17
APPVD.	REVWD	CHKD	REV.	DATE

GENERAL NOTES & DETAILS
LIGHTNING PROTECTION SYSTEM

WEST BENGAL POWER DEVELOPMENT CORPN. LTD.
WEST BENGAL, INDIA

SAGARDIGHI THERMAL POWER EXTENSION PROJECT
PHASE–III, UNITS # 5 (1 x 660 MW)

DEVELOPMENT CONSULTANTS PVT. LTD.
CONSULTING ENGINEERS
KOLKATA MUMBAI CHENNAI NEW DELHI

JOB NO. 12A05 | SCALE : NTS

DWG. NO. 12A05–DWG–E–1000 | REV. -
SHT. 07 OF 12

12A05-DWG-E-1000 Sh. 7 OF 12 13.01.2017

A4_DD (9–96) [210x297]

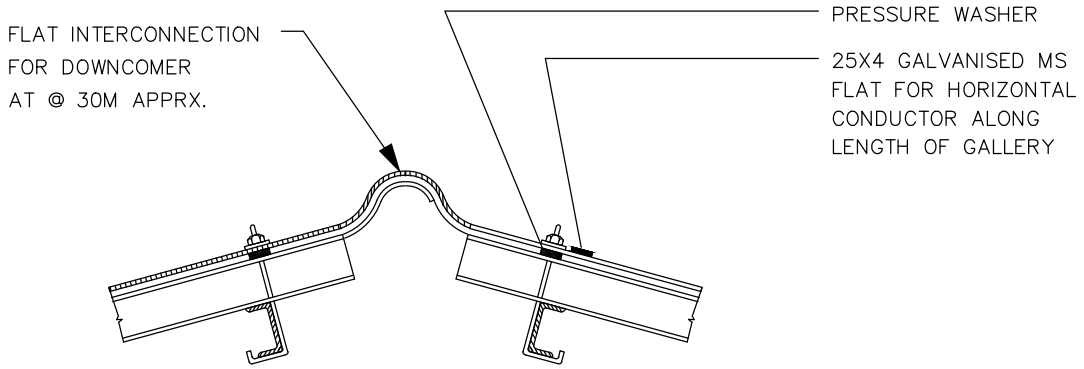

DETAIL–A

(FOR DOWNCOMER)

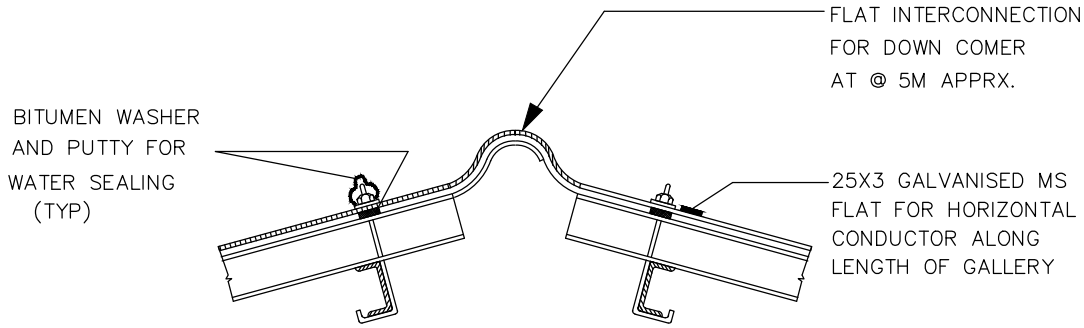

DETAIL–A

(WITHOUT DOWNCOMER)

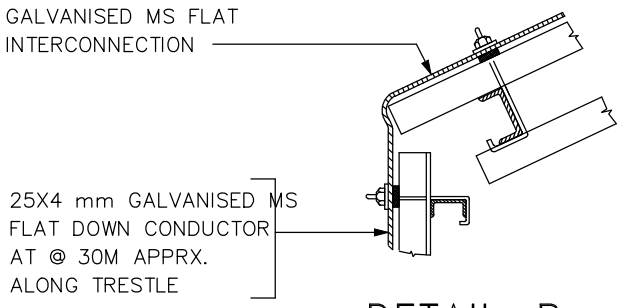

DETAIL–B

FOR TENDER PURPOSE ONLY

DS	RD	RD	–	13.01.17
APPVD.	REVWD	CHKD	REV.	DATE

GENERAL NOTES & DETAILS
LIGHTNING PROTECTION SYSTEM

WEST BENGAL POWER DEVELOPMENT CORPN. LTD.
WEST BENGAL, INDIA

SAGARDIGHI THERMAL POWER EXTENSION PROJECT
PHASE–III, UNITS # 5 (1 x 660 MW)

DEVELOPMENT CONSULTANTS PVT. LTD.
CONSULTING ENGINEERS
KOLKATA MUMBAI CHENNAI NEW DELHI

JOB NO. 12A05 | SCALE : NTS

DWG. NO. 12A05–DWG–E–1000 | REV. -
SHT. 08 OF 12

12A05-DWG-E-1000 Sh. 8 OF 12 13.01.2017

A4_DD (9–96) [210x297]

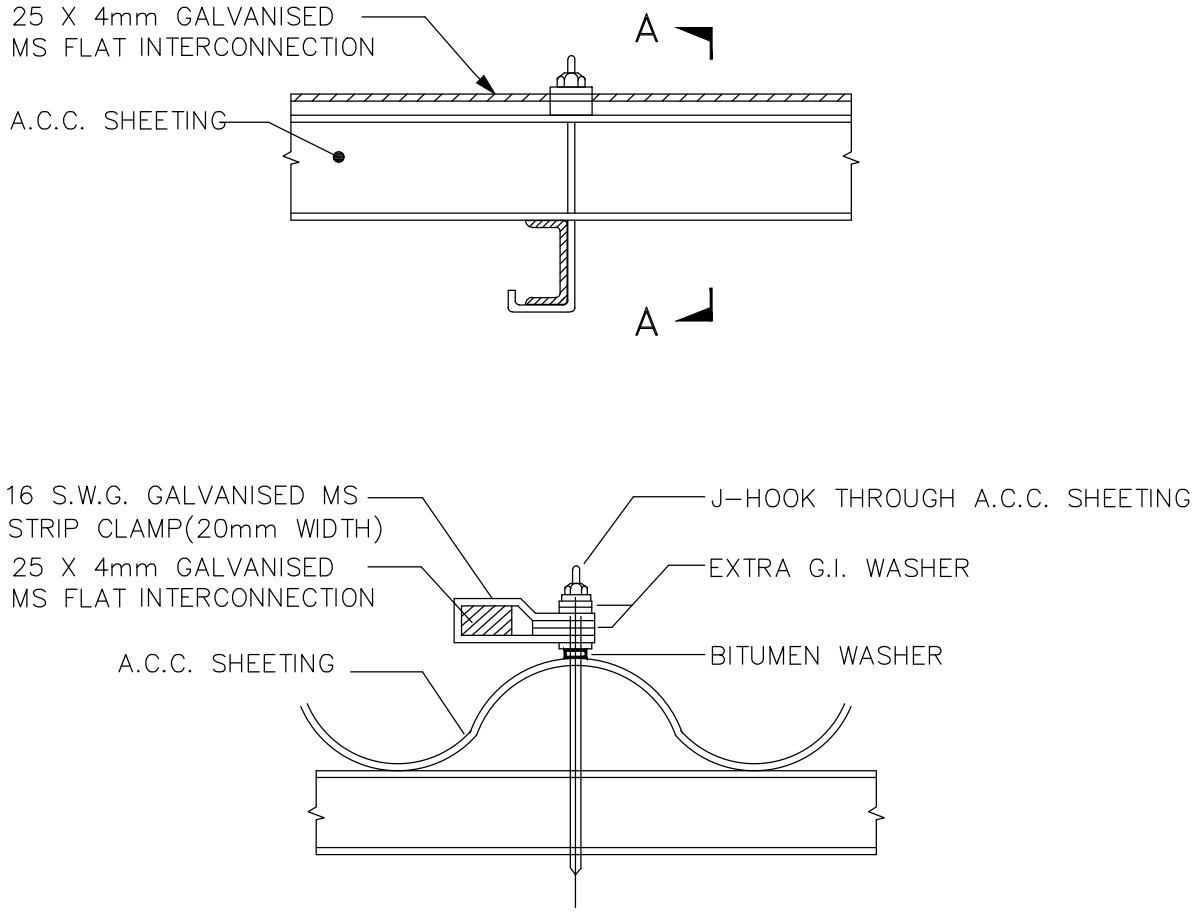

SECTION- A-A

TYPICAL FIXING ARRANGEMENT OF GALVANISED MS INTERCONNECTION FLAT ON ASBESTOS CEMENT CONCRETE (A.C.C) SHEETING (CONVEYOR GALLERY)

FOR TENDER PURPOSE ONLY

DS	RD	RD	-	13.01.17
APPVD.	REVWD	CHKD	REV.	DATE

GENERAL NOTES & DETAILS
LIGHTNING PROTECTION SYSTEM

WEST BENGAL POWER DEVELOPMENT CORPN. LTD.
WEST BENGAL, INDIA

SAGARDIGHI THERMAL POWER EXTENSION PROJECT
PHASE-III, UNITS # 5 (1 x 660 MW)

DEVELOPMENT CONSULTANTS PVT. LTD.
CONSULTING ENGINEERS
KOLKATA MUMBAI CHENNAI NEW DELHI

JOB NO. 12A05 | SCALE : NTS

DWG. NO. 12A05-DWG-E-1000 | REV. -
SHT. 09 OF 12

12A05-DWG-E-1000 Sh. 9 OF 12 13.01.2017

A4_DD (9-96) [210x297]

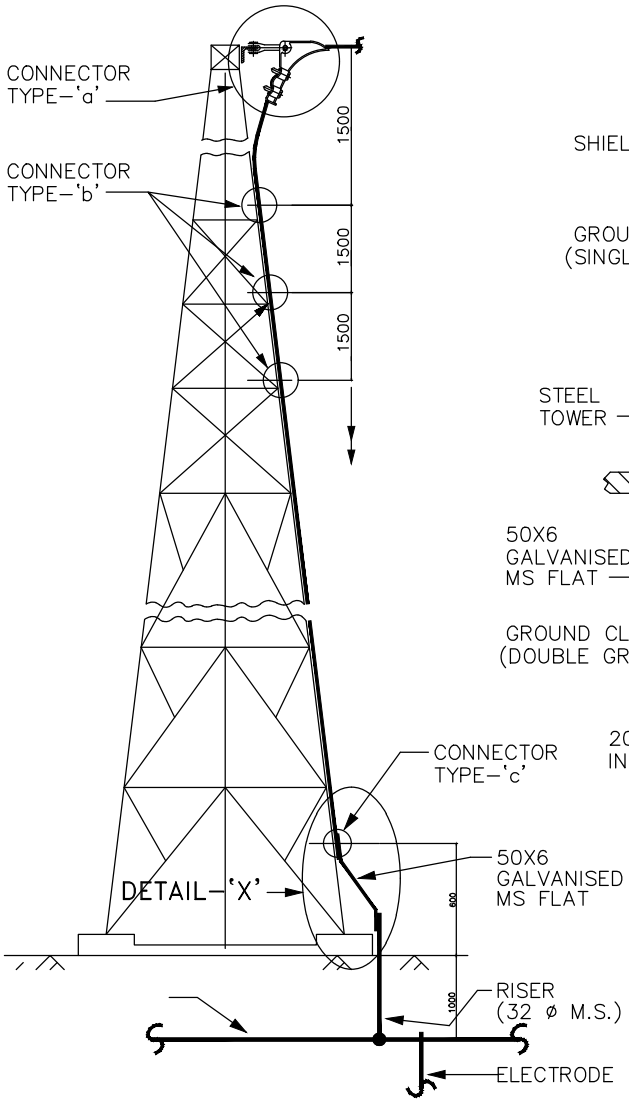

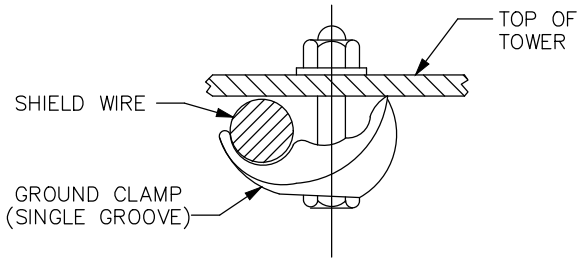

TYPE – 'b'

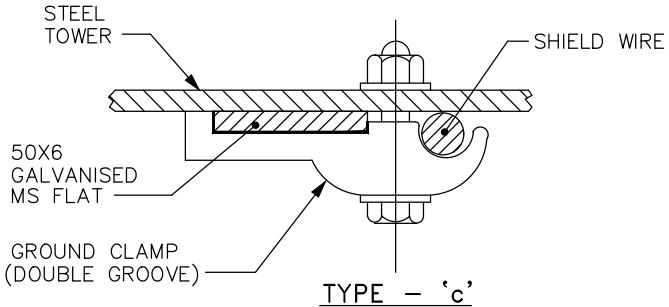

TYPE – 'c'

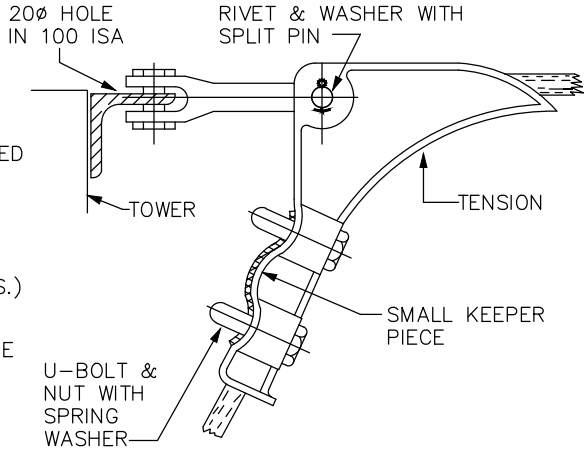

TYPE–'a'

STRINGING ARRANGEMENT & GROUNDING OF G.I. SHIELD WIRE

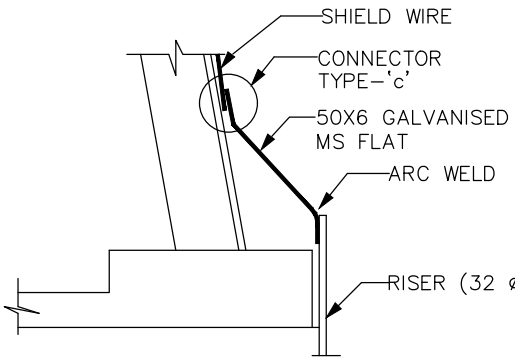

DETAIL – 'X'

FOR TENDER PURPOSE ONLY

DS	RD	RD	–	13.01.17
APPVD.	REVWD	CHKD	REV.	DATE

GENERAL NOTES & DETAILS
LIGHTNING PROTECTION SYSTEM

WEST BENGAL POWER DEVELOPMENT CORPN. LTD.
WEST BENGAL, INDIA

SAGARDIGHI THERMAL POWER EXTENSION PROJECT
PHASE–III, UNITS # 5 (1 x 660 MW)

DEVELOPMENT CONSULTANTS PVT. LTD.
CONSULTING ENGINEERS
KOLKATA MUMBAI CHENNAI NEW DELHI

JOB NO. 12A05 | SCALE : NTS

DWG. NO. 12A05–DWG–E–1000 | REV. -
SHT. 10 OF 12

12A05-DWG-E-1000 Sh. 10 OF 12 13.01.2017

A4_DD (9–96) [210x297]

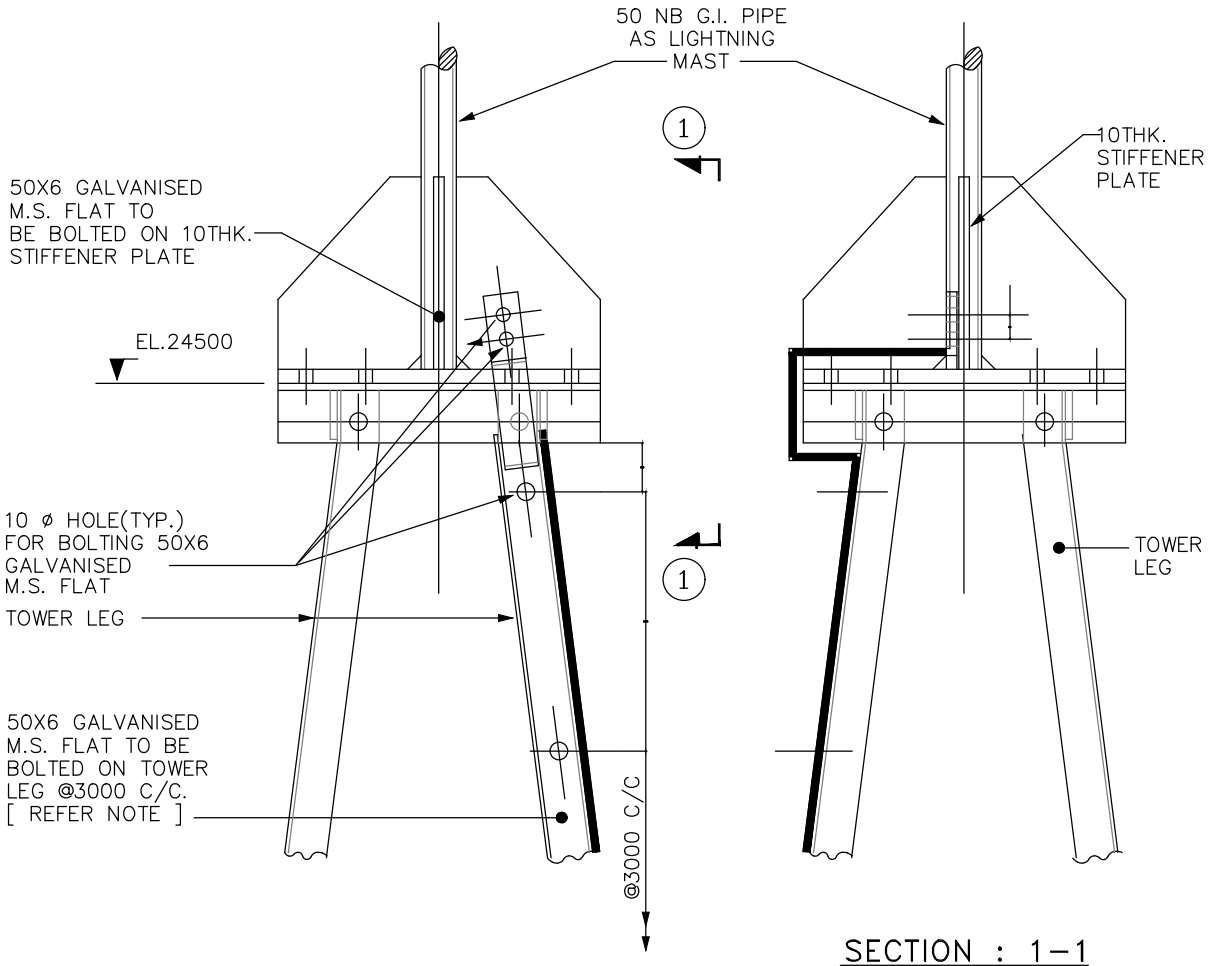

SECTION : 1–1

GROUNDING OF SUB–STATION LIGHTNING MAST

NOTE: THESE FLATS SHALL SERVE AS GROUND CONDUCTOR DOWNCOMER AND SHALL BE CONNECTED TO SUBSTATION GROUND GRID

FOR TENDER PURPOSE ONLY

DS	RD	RD	–	13.01.17
APPVD.	REVWD	CHKD	REV.	DATE

GENERAL NOTES & DETAILS
LIGHTNING PROTECTION SYSTEM

WEST BENGAL POWER DEVELOPMENT CORPN. LTD.
WEST BENGAL, INDIA

SAGARDIGHI THERMAL POWER EXTENSION PROJECT
PHASE–III, UNITS # 5 (1 x 660 MW)

DEVELOPMENT CONSULTANTS PVT. LTD.
CONSULTING ENGINEERS
KOLKATA MUMBAI CHENNAI NEW DELHI

JOB NO. 12A05 | SCALE : NTS

DWG. NO. 12A05–DWG–E–1000 | REV. -
SHT. 11 OF 12

12A05-DWG-E-1000 Sh. 11 OF 12 13.01.2017

A4_DD (9–96) [210x297]

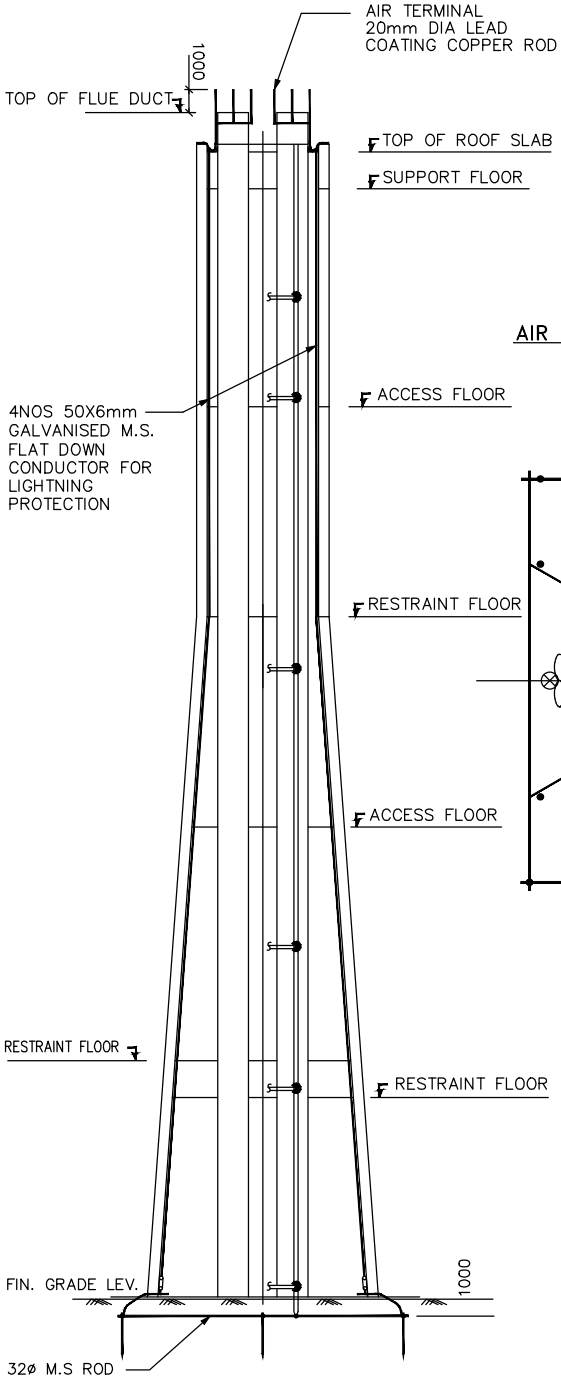

LIGHTNING PROTECTION
ARRANGEMENT OF RCC STACK

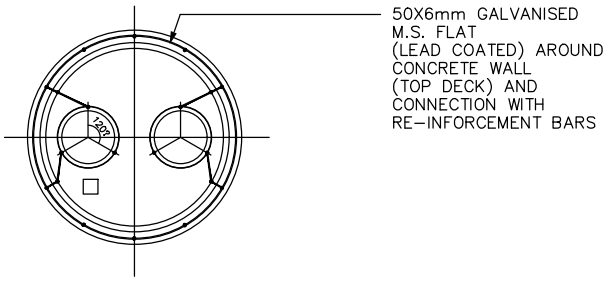

TOP OF STACK
AIR TERMINAL & DOWNCOMER LOCATION

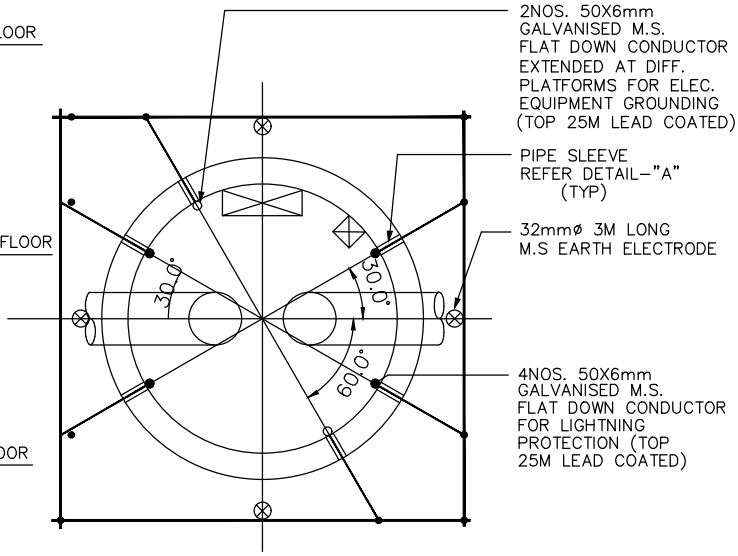

PLAN AT EL.(±)0.0
LIGHTNING DOWN CONDUCTOR

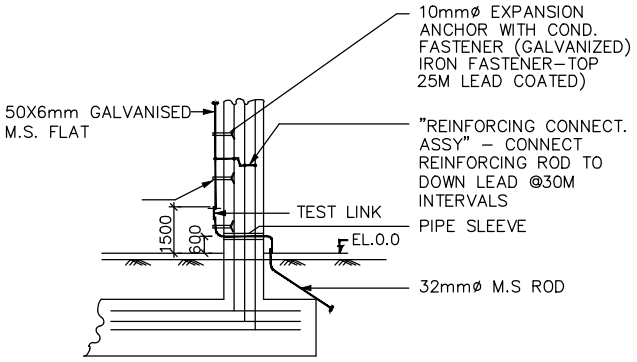

DETAIL - "A"

FOR TENDER PURPOSE ONLY

DS	RD	RD	-	13.01.17
APPVD.	REVWD	CHKD	REV.	DATE

GENERAL NOTES & DETAILS
LIGHTNING PROTECTION SYSTEM

WEST BENGAL POWER DEVELOPMENT CORPN. LTD.
WEST BENGAL, INDIA

SAGARDIGHI THERMAL POWER EXTENSION PROJECT
PHASE-III, UNITS # 5 (1 x 660 MW)

DEVELOPMENT CONSULTANTS PVT. LTD.
CONSULTING ENGINEERS
KOLKATA MUMBAI CHENNAI NEW DELHI

JOB NO. 12A05 | SCALE : NTS

DWG. NO. 12A05-DWG-E-1000 | REV. -
SHT. 12 OF 12

12A05-DWG-E-1000 Sh. 12 OF 12 13.01.2017

A4_DD (9-96) [210x297]

Annexure-

Project :- 400 kV Switchyard at 1X660MW Sagardighi unit-5 project
Customer :- WBPDCL
Consultant :- DCPL

PROCEDURE FOR WELDING OF ALUMINIUM BUSES

A. Recommended welding procedures to insure a sound weld are as follows:

Pure aluminum melts at 660 Deg. C while aluminum alloy melts in the range of 519 Deg. C depending on the alloy content of the particular metal involved. When aluminum alloy are heated there is no change in color. This makes it difficult, if not impossible; to tell metal is near the welding temperature.

The ever present surface oxide films on aluminum have a melting point of 1982 Deg. C. The parent aluminum or aluminum alloy can therefore be melted without fusing the surface oxides. Unless this film is removed, cleanliness of the molten filler metal and the parent metal cannot be completed and both strength and conductivity may be sacrificed. Therefore, it is of prime importance that aluminum oxides be removed from the aluminum alloys before welding is started. In the shielded arc welding method the shielding gas has a tendency to clean the material as welding progresses.

B. CLEANING OF BUSES & FITTINGS:

It is very important to remove all greases and oxides from the surfaces to be welded. This can be accomplished by using a mild alkaline solution or standard degreasing solution. The preferred method is to use a stainless steel wire brush and vigorously scrub the surfaces to be welded. The stainless steel brushes are specified because the stainless steel has fewer tendencies to pick up particles of aluminum.

C. WELDING METHODS

The following types of welding methods for welding aluminum fittings and buses are recommended.

1. TUNGESTEN-ARC WELDING (TIG)

The inert-gas shielded tungsten arc process is widely used for welding aluminum bus fittings. In this process the arc is established between a non-consumable tungsten electrode and the section to be welded. Inert gas envelopes the arc to prevent oxidation during welding.

Hence no flux is required. A bare filler rod supplies filler metal to the weld area. To initiate the arc the tungsten electrode is placed in contact with the component and then withdrawn to establish an arc length of approximately 3/16". The arc is given a circular motion until the base metal liquefies and the weld puddle is established. Filler metal is added by hand as required. In this process, if more than one pass is required for a sufficient weld, the weld should be wire brushed between passes, to remove any surface dirt or oxides which have accumulated from the previous pass. Since no flux is used the finished weld does not require cleaning. In this process the heat of the tungsten arc is concentrated in a smaller area and is much faster than the conventional type of welding and distortion of the weld is negligible since the heat is concentrated in a small area. In this process, if thickness is greater than 0.5" arc to be welded, pre-heating of parts will increase the arc speed.

2. METALLIC ARC INERT GAS SHIELDED WELDING

MIG welding process combines the advantages of tungsten arc welding with the increased welding speed. Welding can be done from any position and the process can be either manual or automatic, Manual welding techniques are somewhat different from other methods. However, a welder can be trained to use the MIG process with only a few days concentrated training. In the MIG process the bare filler rod is supplied as a coil of bare wire. In the commercially available equipment this wire is added to the weld at predetermined rate by a motor driven feed that can be adjusted to the magnitude of the welding current. In this process as well as the tungsten arc process, gas forms a shield around the arc to prevent oxidation during welding.

Either helium, argon or a mixture of helium and argon are suitable shielding gases. Pure argon is most widely used on the gas arc usually mixed to combine the hotter arc argon. If exceptionally hot arc characteristics are required pure helium can be substituted for the gas mixture. Precaution should be exercised if this substitution is made in that it is very easy to burn through the items that are to be welded with a pure helium atmosphere.

As it is readily apparent, the basic difference between the two types of welding apparatus is the automatic feeding mechanism for the filler wire. In both types of apparatuses the electrode holder and the welding gun can or cannot be cooled by water. If welding currents of more than 125 Amps are required, both methods will have to have water cooling apparatuses to the electrode holder and the welding gun.

D.WELDERS QUALIFICATIONS

No welding should be done until the operator has had experience with welding aluminum alloys by the methods described above, Men with previous experience with in metal welding should be selected for training in welding aluminum for a period of training of not less than one week after which time the man can be considered to be proficient in the use of the equipment and in the welding of aluminum joints. After this period there should be no difficulty experienced in welding aluminum alloys. It is suggested, if practical, that welders should practice on actual fittings or buses before proceeding with the welding of the required job.

The following is the recommended specification for the current fittings wire feeds, gas flows etc. These specifications are of a general nature to the extent that many factors have to be considered such as:

1. Type of equipment used, whether water cooled or not.
2. The size and mass of the piece to be welded.
3. The position of the weld.
4. And most important of all, the operator's skill
5. All persons in the welding area would wear the proper shields. The arc is approximately twice as strong as the standard AC welding arc. Extreme caution should be exercised for the protection of eyes.

ACCEPTANCE STANDARDS FOR NON-DESTRUCTIVE TESTING LIQUID PENETRANT EXAMINATION OF WELDED JOINTS

a) Evaluation of indications:

- Relevant indications are those which result from mechanical discontinuities.
- Linear indications are those indications in which the length is more than three times with width.
- Rounded indications or indication, which are circular or elliptical with the length less than three times, the width.
- Any questionable or doubtful indications shall be re-tested to verify whether or not actual defects are present.
- Localised surface imperfections, such as may occur from machining marks, surface conditions, may produce similar indications, which are not relevant to detection of unacceptable discontinuities.

b) **Acceptance standards**:

- Linear indications
- Four or more rounded defects with any dimensions more than 1.6 mm in a line separated by 1/16 inch (1.6 mm) or less (edge to edge)

c) **Defect removal and repair:**

Unacceptable imperfections shall be removed and reexamination made to assure the complete removal. Whenever a defect is removed and subsequent repair by welding is not required, the excavated area shall be blended into the surrounding surface so as to avoid sharp notches, crevices or corners. Where welding is required after removal of a defect, the area shall be cleaned and welding performed in accordance with a qualified welding procedure, Completed repairs shall be re-examined by the method originally used for detection of the defection.

d) **Treatment of imperfections believed non-relevant.**

Any indication of an imperfection, which is believed to be non-relevant, shall be regarded as defect unless, on re-evaluation, it is shown by re-examination by the same method or by the use of other non-destructive methods and/ or by surface conditioning that no unacceptable defect is present.

e) **Examination of areas form which defects have been removed:**

After a defect is thought to have been removed and prior to making weld repairs, the area shall be examined by suitable methods to ensure the defect has been eliminated.

f) **Re-examination of repaired areas:**

After repairs are made, the repaired areas shall be blended.

ACCEPTANCE STANDARDS FOR NON-DESTRUCTIVE TESTING RADIOGRAPHIC EXAMINATION OF WELDED JOINTS

Radiographic examination shall cover minimum 10% of weld seam and acceptance standard for visual examination and Radiography shall be as follows:

Any of the following imperfections shall not be acceptable.

1. Cracks

2. Zone of incomplete fusion or penetration, which exceed 10% of the weld length of the joint in longitudinal or transverse butt weld, where full penetration is intended by the weld procedure, some lack of penetration acceptable. The total length of weld with lack of penetration shall not exceed 10% of the overall weld length. At no place, shall weld penetration be less than 90% of the thickness of the material. Continuous occurrence of lack of penetration is permitted, but shall not exceed 50 mm in any 500 mm length of weld.

3. Inadequate weld dimensions, root cavity (shrinkage) and incompletely filled groove greater than 10% effective throat thickness.

4. Excess penetration shall be permitted provided it does not exceed 25% of the wall thickness or 4 mm whichever is smaller.

5. Weld reinforcement: Build up in excess of 25% of the effective throat thickness shall be dressed. Any reinforcement shall be substantially symmetrical about the center line of the weld and shall be of smooth contour blending smoothly at the toes with the parent material..

6. Undercutting and overlapping, greater than 10% effective throat thickness.

7. Elongated cavities and/or worm holes exceeding 3 mm dia or equivalent area in length provided the limitations on porosity are met with.

8. Copper, tungsten or oxide inclusions greater than t/1 or 3 mm whichever is smaller.

9. Crater pipes exceeding 2597o effective throat thickness or 3 mm whichever is smaller.

10. Porosity: Scattered porosity not exceeding 0.5% by volume is acceptable. In general, the size of the pores shall not exceed 0.8 mm dia, but occasional 1.6 mm dia pores may be acceptable, provided the following limits are not exceeded.
    a) Where pore size is 0.4 mm or less, up to 150 t pores may be permitted in 1000 mm sq. area of radiograph.
    b) Where pore size is 0.8 mm or less, up to 19 t pores may be permitted in 1000 mm. sq. area of radiograph.
    c) Where pore sizes are generally 0.8 mm dia or less. but occasional 1.6 mm dia/pores are present, up to 9t pores of 0.8 mm dia may be permitted in 1000 sq. mm area of radiograph, provided the number of pores up to 1.6 mm in dia does not exceed it.
    d) However. visible surface porosity> 1mm dia is not acceptable.

Note:

.i. In all cases, t+ thickness of the thinnest section of the weld under examination.

BHARAT HEAVY ELECTRICALS LIMITED
TRANSMISSION PROJECTS ENGINEERING MANAGEMENT
NEW DELHI

DOCUMENT No.	**TB xxx 618 002a**	Rev 06	Prepared	Checked	Appd
TYPE OF DOC.	**TECHNICAL SPECFICATION**	NAME	**BVG**	**PLK**	**RMS**
TITLE	**G I HARDWARES**	SIGN	-SD-	-SD-	-SD-
		DATE			
		GROUP	**TBEM**		
		W.O. No			
CUSTOMER/ CONSULTANT					
PROJECT					

COPYRIGHT & CONFIDENTIAL
The information in this document is the property of BHARAT HEAVY ELECTRICALS LIMITED
This must not be used directly or indirectly in anyway detrimental to the interest of the company.

Contents:

Section No.	Description	No of Pages
SECTION-1	**SCOPE, SPECIFIC TECHNICAL REQUIREMENTS and QUANTITIES**	**01**
SECTION-2	**STANDARD SPECIFICATION**	**04**
SECTION-3	**PROJECT DETAILS AND GENERAL SPECIFICATION**	**01**
SECTION-4	**GUARANTEED TECHNICAL PARTICULARS (Not Applicable)**	**....**
SECTION-5	**MANUFACTURING QUALITY PLAN (Not Applicable)**	**....**
SECTION-6	**CHECK LIST**	**01**

Rev	Date	Altered	Checked	Approved	
06	19.12.17	SV	BVG	PLK/AS	Unit weights of nuts & bolts (M16x35 to M16x100 & M24x45 to M24x120) updated in line with PGCIL approved weights. Unit weights of M24x125 to M24x140 added as per PGCIL approved weights.
05	27.09.17	SV/BVG	PLK/AS	NSR	Unit wt of Pack Washers, Nuts & Bolts (M16x105 to M16x120, M12x30, M12x65 to M12x120, M20x40 to M20x120, and M24x45 to M24x120), Sp. Washers (4mm thk for M20 & 5mm thk for M24) and Step Bolt added.
04	18.11.10	BVG	PLK	RMS	Unit wt of hardware added
02	13.4.06.	BVG	PLK	RMS	Eqpt mounting hardwares added.

Distribution				
To				
Copies				

SECTION - 1

SCOPE, SPECIFIC TECHNICAL REQUIREMENTS & QUANTITIES

1.1 SCOPE

The scope of this specification is to specify all details required by a supplier for supply of galvanized hardwares for projects being executed by BHEL on turnkey basis for NTPC, PGCIL, SEBs and other Customers.

1.2 SPECIFIC TECHNICAL REQUIREMENTS

The specific technical requirements shall be as per Standard Technical Specification (Refer Section 2).

1.3 QUANTITIES

The quantities shall be as per attached BOQ.

SECTION - 2

2.0 GENERAL

This section covers the standard technical specification for GI Hardware.

2.1 BOLTS:

All bolts for member connections in towers, beams & equipment support structures shall conform to IS: 12427 - 2001 and for step bolts shall conform to IS: 10238 – 1982.

The mechanical properties shall conform to property class 5.6 of IS: 1367 (part 3) - 1991.

All bolt heads shall have hexagonal shape, the heads being forged out of the solid material truly concentric and square with the shank, which must be perfectly straight.

Fully threaded bolts should not be used.

All bolts shall be threaded with metric standard thread to take the full depth of the nut and permit firm grip of the member.

All bolts shall be hot dip galvanized as per IS: 1367 (Part 13) – 1983.

2.2 NUTS:

All nuts shall conform to IS: 1363 (Part 3) –1992.

The mechanical properties shall conform to property class 5 of IS: 1367 (part 6) – 1980.

The nuts shall be capable of being worked with fingers along the entire threaded portion of the bolt with a neat fit capable of developing the full strength of the bolt.

All nuts shall be hot dip galvanized as per IS: 1367 (Part 13) – 1983.

2.3 PLAIN WASHERS:

All plain washers shall be punched washers, A-type conforming to IS: 2016-1967.

These shall be hot dip galvanized as per IS: 4759 – 1984.

2.4 SPRING WASHER:

All spring washers shall be of spring steel, positive lock type and conforming to type B of IS: 3063-1972. The thickness of spring washer shall be as specified under:

Bolt Diameter	Thickness of Spring washers
24 mm	5.0 mm
20 mm	4.0 mm
16 mm	3.5 mm
12 mm	2.5 mm

These shall be electro-galvanized as per IS: 1573 – 1986.

2.5 UNIT WEIGHT OF BOLTS I/C NUT, PLAIN AND SPRING WASHERS:

For purpose of payment, following unit weights as indicated below shall be considered.

A.) STANDARD BOLTS I/C ONE NUT UNIT WEIGHTS

SIZE / LENGTH (MM)	UNIT WEIGHT OF BOLT WITH ONE NUT (KG)			
	M12	M16	M20	M24
30	0.0575	---	---	---
35	0.0620	0.119	---	---
40	0.0664	0.126	0.222	---
45	0.0708	0.134	0.234	0.362
50	0.0753	0.142	0.247	0.380
55	0.0797	0.150	0.259	0.398
60	0.0842	0.158	0.272	0.416
65	0.0886	0.164	0.284	0.434
70	0.0930	0.173	0.296	0.452
75	0.0975	0.180	0.309	0.470
80	0.1020	0.185	0.321	0.488
85	0.1070	0.193	0.334	0.506
90	0.1110	0.199	0.346	0.524
95	0.1160	0.209	0.358	0.541
100	0.1200	0.218	0.371	0.560
105	0.1240	0.228	0.383	0.575
110	0.1290	0.236	0.395	0.596
115	0.1340	0.244	0.407	0.614
120	0.1380	0.252	0.420	0.632
125	---	---	---	0.650
130	---	---	---	0.663
135	---	---	---	0.686
140	---	---	---	0.702

B.) SPRING WASHER

S. NO.	TYPE	TOTAL WT (KG)
1	5.0mm thk (M24 bolt)	0.02620
2	5.0mm thk (M20 bolt)	0.01520
3	3.5mm thk (M16 bolt)	0.00891
4	2.5mm thk (M12 bolt)	0.00382

C.) PACK WASHER FOR M16 BOLTS

C1.) CIRCULAR (OUTER DIA = 30MM & INNER DIA OF HOLE = 18MM)

S. NO.	TYPE	TOTAL WT (KG)
1	2mm thk	0.007
2	4mm thk	0.014
3	5mm thk	0.018
4	6mm thk	0.021
5	8mm thk	0.028
6	10mm thk	0.036
7	12mm thk	0.043
8	16mm thk	0.057
9	18mm thk	0.064
10	20mm thk	0.071

C2) SQUARE (SIZE = 30MM X 30MM & INNER DIA OF HOLE = 18MM)

S. NO.	TYPE	TOTAL WT (KG)
1	2mm thk	0.010
2	4mm thk	0.020
3	5mm thk	0.025
4	6mm thk	0.030
5	8mm thk	0.041
6	10mm thk	0.051
7	12mm thk	0.061
8	16mm thk	0.081
9	18mm thk	0.091
10	20mm thk	0.101

D.) STEP BOLT WITH TWO NUTS: UNIT WT

S. NO.	TYPE	SIZE OF BOLTS	TOTAL WT (KG)
1	M16	16 ϕ X 175 LG	0.391

E.) For supplies of bolts i/c nuts, plain washers and spring washer other than those listed above, payment shall be made based on unit weights worked out considering theoretical dimensions & density of steel as 7850kg/cum.

F.) Vendor has to supply the quantity of bolts including nuts and washers as per the quantity stated in the BOQ which will be provided during detailed engineering. However, for payment purpose, the weight will be calculated as per the unit weight given in Cl. 2.5 of the specification.

SECTION - 3

PROJECT DETAILS AND GENERAL SPECIFICATIONS

3.0 GENERAL

This section stipulates the General Technical Requirements under the contract and will form an integral part of the Technical Specification.

3.1 SITE INFORMATION

SL.NO.	DESCRIPTION	
3.1.1	**PROJECT INFORMATION**	
	a) Customer	
	b) Project	
	c) Project location	
	d) Transport facilities Nearest Railway Station/Gauge Distance from Railway Station	
	e) Access roads	

3.2 STANDARDS

All materials shall comply in all respect with the requirement of the latest edition of the relevant codes as listed in Section 2.

SECTION-6

CHECK LIST FOR INFORMATION TO BE FURNISHED WITH OFFER
RETURN THIS CHECKLIST AS PART OF THE OFFER DULY SIGNED

The offer may not be considered if the following information and this Checklist are not enclosed with the Offer.

BHEL ENQUIRY. NO:
BIDDER: OFFER REFERENCE:

6.1 Deviations Tick YES NO

If yes,

S. No.	Deviation	Clause No.
1		
2		
3		
4		

(Signature & Seal of Bidder)

ANNEX - I

Proposed average Weight of Galvanised Hexagonal Head Bolt with Nut

SR NO	ITEM DESCRIPTION	Arrived weight (minimum of avg weights)
	HEX BOLT WITH NUT	
1	M16 X 35	119
2	M16 X 40	126
3	M16 X 45	134
4	M16 X 50	142
5	M16 X 55	150
6	M16 X 60	158
7	M16 X 65	164
8	M16 X 70	173
9	M16 X 75	180
10	M16 X 80	185
11	M16 X 85	193
12	M16 X 90	199
13	M16 X 95	209
14	M16 X 100	218

Annexure-I

Proposed unit weight of Galvanised Hexagonal Head Bolt with Nut

Bolt Size	unit weight (g)
M24x45	362
M24x50	380
M24x55	398
M24x60	416
M24x65	434
M24x70	452
M24x75	470
M24x80	488
M24x85	506
M24x90	524
M24x95	541
M24x100	560
M24x105	575
M24x110	596
M24x115	614
M24x120	632
M24x125	650
M24x130	663
M24x135	686
M24x140	702

1x660 MW Sagardighi TPP Extn unit-5 of WBPDCL , List of Mandatory Spares			
MANDATORY SPARES			Annexure-A
Sl. No.	**Description**	**Qty.**	
(1)	(2)	(3)	
7.05.00	**400KVSwitchyard**		
7.05.01	**400KV Breaker**		Lot
(i)	Complete Set of Breaker	1Set	
		(one set means 3-phase unit)	
(ii)	Accumulator with it's Accessories	1Set	
(iii)	Complete Mechanisim Box for Breaker	1No.	
(iv)	Closing Coil with resistor	6Nos.	
(v)	Tripping Coil with resistor	12Nos.	
(vi)	Power and control Contactor, limit switches, timers etc.	2Nos. for each type & rating	
(vii)	Auxiliary Relay	5Nos. each type	
(viii)	Braker Auxiliary Contact	2Sets	
(ix)	Gas Density Monitor	1No.	
(x)	Pressure Switch (if applicable)	2Nos. for each type & rating	
(xi)	Double Interrupter Assembly Complete Set	1Set.	
(xii)	Set of O-ring	3Sets	
(xiii)	Set of Seals	3Sets	
(xiv)	Set of Dynamic Seals	3Sets	
(xv)	Aero-shell Fluid	25Ltrs.	
(xvi)	Hollow Column Insulators	2Nos.	
(xvii)	SF6 Gas filled Cylinder	1Nos.	
7.05.02	**Isolator**		**Lot**
(i)	Isolator Complete Set	1Set. of each type and rating (1 set means 3-phase unit)	
(ii)	Complete Set of Gear Mechanism alonwith Link & Nut	2Sets for each type	
(iii)	Complete set of motor operating mechanism box with all accessories including motor.	1Set for each type and rating	
(iv)	Limit Switch	3 sets for each type and rating	
(v)	Auxiliary Switch (6 NO + 6 NC or as applicable)	3Sets for each type and rating	
(vi)	Copper contact fingers for female & male contacts	3Sets for each type and rating	
(vii)	Drive Motor with gear	1No for each type and rating	
(viii)	Corona shielding ring	1 Set	
(ix)	Bearings	1 Set	
(x)	Interlocking coil, timers, key interlock	2 Sets for each rating	
(xi)	Power Contactor	2 Nos for each type and rating	
(xii)	Auxiliary Relay Contactor	5Nos.	
(xiii)	Thermal Over Load Relay	5Nos.	
7.05.03	**Surge Arrestor complete with insulating base and surge monitor**	1Set.	
7.05.04	**CT**	1No.for each type, rating & application	
7.05.05	**CVT**	1No.	
7.05.06	**Common Electrical Items for Breaker & Isolator**		
(i)	Terminal Block		
(a)	Power	10Nos.	
(b)	Control	10Nos.	
(ii)	Complete set of Push Button Switch	2Nos. for each colour and area of application	
(iii)	Locable Type Switch	2Nos for each type and rating	
(iv)	Selector Switch	2Nos. for each type and rating	

(v)	MCCB/MCB/Fuse unit with fuse (AC & DC application)	2No. for each type and rating	
7.05.07	**Switch Yard Harware (400KV)**		
(i)	**String / Strain insulators with hardware**	1 Set for each rating	
(ii)	**Bus post insulators**	3 Nos. for each rating	
(iii)	**Clamps, spacers with all accessories**	5% (rounded off to the next higher integer) of total qty of each type and rating.	
(iv)	**connectors including equipment terminal connectors complete set with all accessories**	20% (rounded off to the next higher integer) of total qty or minimum 6 nos. whichever is higher for each type and rating.	
(v)	**Moose Conductor**	1(one) Drum of 1Km Length	
7.05.08	**400KV Switch yard Protection and Substation Automation System**		
(i)	Numerical Relays	1 No of each make, type & range & rating.	
(ii)	Conventional (Electromagnetic/Static type) Relay	2 No of each make, type & range & rating.	
(iii)	Auxiliary relays used in the scheme each type and range/rating	2 No of each make, type & range & rating.	
(iv)	Bay Control Units (Complete set with all accessories, cards, module etc.)	2 Sets.	
(v)	Main Aux. CTs & PTs	1 No. each type & rating & range	
(vi)	Control and Selector Switches	2 no of each type & rating & application	
(vii)	Cards and I/O Modules	2 no of each type	
(viii)	FO cable.	500 meter	
(ix)	EFS	1 no of each type	
(x)	Meters	1 No each type.	
(xi)	Complete Set of OWS	1No.	
7.05.09	**UPS**		
(i)	UPS (applicable only for 5KVA rating or Bellow)	One Complete Set	
(ii)	UPS (applicable only for above 5KVA rating)	as applicable as per Sl. No.7.11.00	
7.05.10	**Transducer**	20% (rounded off to the next higher integer) of total quantity used for each type and rating or minimum 1Nos. Whichever is higher	
7.05.11	Network Components		
(i)	Network Interface Card	10% (rounded off to the next higher integer) of total nos. used for each type and model in the system or minimum 1No. whichever is more	
(ii)	Un-managed Switch	10% (rounded off to the next higher integer) of total nos. used for each type and model in the system or minimum 1No. whichever is more	
(iii)	Transceiver (Optical to UTPconverter)	10% (rounded off to the next higher integer) of total nos. used for each type and model in the system or minimum 2(two) nos. whichever is more	
(iv)	Fibre-optic Patch Cords	10% (rounded off to the next higher integer) of total nos. used for each type and model in the system or minimum 2(two) nos. whichever is more	
7.08.00	**415V System**		

7.08.01	**11/0.415KVTransformer (for Each make, type and rating of Transformer)**		
(i)	Door Limit Switch complete set	1 set (1 set means total requirement for one Transformer)	
(ii)	Neutral CT	1 no of each type and rating	
(iii)	Temperature scanner	1 no.	
(iv)	bhy	3 No	
(v)	LV Bushing with metal parts, connectors and gaskets	3 No	
(vi)	LV neutral Bushing with metal parts, connectors and gaskets	1 No	
(vii)	Post Insulator	1 set (1 set means total requirement for one Transformer)	
(viii)	Limb of complete LT & HT of temperature sensing devices	1 Set (1 set means total requirement for one Transformer)	
7.08.02	**415V Air Circuit Breaker (for Each make, type and rating of ACB)**		
(i)	Trip Coil	20% of total nos. or minimum 5 nos whichever is higher for each type a rating used in each switchgear (PCC/PMCC/MCC/ACDB)	
(ii)	Closing Coil	20% of total nos. or minimum 5 nos whichever is higher for each type a rating used in each switchgear (PCC/PMCC/MCC/ACDB)	
(iii)	Spring Charging Motor	2 nos.	
(iv)	Spring Charging Motor with complete Mechanism	2 nos.	
(v)	Spring Charged Limit Switch	5 nos.	
(vi)	Thermal Overload for Spring Charging Motor	2 nos.	
(vii)	Main Contact (Fixed and moving) assembly	5 sets (1 set consists of 3 nos.) for each type and rating	
(viii)	Arcing Contact (Fixed and moving) assembly	5 sets (1 set consists of 3 nos.) for each type and rating	
(ix)	Breaker Jaw Contact (Bus-end & Breaker- end) assembly	5 sets (1 set consists of 3 nos.) for each type and rating	
(x)	Sliding Contact (Fixed & Moving)	3 sets.	
(xi)	Breaker Auxiliary Contact Block	5 nos.	
(xii)	Arcing Chute	2 sets (1 set consists of 3 nos.) for each type and rating	
(xiii)	Plug Socket with Prefab cable	3 nos	
(xiv)	Position Limit Switch	5 sets	
7.08.03	**415VPCC, PMCC, MCC, ACDB, DCDB, Elect. Control Panel (For each PCC, PMCC, MCC, ACDB, DCDB and Elect. Control Panel) (applicable items of PCC, PMCC, MCC, ACDB, DCDB and Elect. Control Panel shall be considered)**		
(i)	Indicating Lamps complete assembly		
(a)	Red	3 nos of each make and type.	
(b)	Blue	3 nos of each make and type.	
(c)	Green	3 nos of each make and type.	
(d)	White	3 nos of each make and type.	
(e)	Amber	3 nos of each make and type.	
(ii)	CT	2 nos. for each make, type and Rating	
(iii)	Transducer	2 no for each make, type and Rating	
(iv)	Trip / Neutral / close Control Switch	2 nos. for each make, type and Rating	
(v)	Switch gear or MCC / Trial / Normal selector switch	2 nos. for each make, type and Rating	
(vi)	Local/Remote selector switch	2 nos. for each make, type and Rating	

(vii)	AC Supply On / Off Switch	1 no. for each make, type and Rating	415V system for Switchyard
(viii)	DC Supply On / Off Switch	1 no. for each make, type and Rating	
(ix)	Motor Heater On /Off Switch	1 no. for each make, type and Rating	
(x)	DC Supply Source Selector Switch (3-position)	1 no. for each make, type and Rating	
(xi)	Ammeter Selector Switch	1 no. for each make, type and Rating	
(xii)	Voltmeter Selector Switch	1 no. for each make, type and Rating	
(xiii)	Voltmeter	2 no. for each make, type and Rating	
(xiv)	Ammeter	2 no. for each make, type and Rating	
(xv)	Auxiliary Control Contactor		
(a)	Auxiliary Control Contactor complete assembly	10% of total nos for each make, type and Rating.	
(b)	Auxiliary Control Contactor spare kits	10% of total nos. for each make, type and Rating.	
(c)	Auxiliary Control Contactor Coils	10% of total nos for each make, type and Rating.	
(xvi)	Power Contactor		
(a)	Power Contactor Complete Assembly	10% of total nos for each make, type and rating	
(b)	Power Contactor spare kits	10% of total nos for each make, type and Rating.	
(c)	Power Contactor Coils	10% of total nos for each make, type and Rating.	
(xvii)	MCCB	5% of total nos. for each make, type and rating.	
(xviii)	MCB	5% of total nos. for each make, type and rating.	
(xix)	Switch Fuse Unit (DC)	10% of total nos. for each make, type and rating.	
(xx)	Power Fuse	5% of total nos. for each make, type and rating.	
(xxi)	Control Fuse	5% of total nos. for each make, type and rating.	
(xxii)	Thermal Overload Relay	5% of total nos. for each make, type and rating.	
(xxii)	Sliding contact (Fixed and moving) Complete assembly	2 sets of each make, type and rating	
(xxiii)	Busbar to module Lira Contact assembly	2 sets of each make, type and rating (1 set means all 3 ph+ neutral)	
(xxiv)	Control and Aux. Transformer	1 no of each make, type and rating	
(xxv)	Delay Timer	2 no of each make, type and rating	
(xxvi)	Power Terminal Block	2 sets for each make, type and rating	
(xxvii)	Control Terminal Block	2 sets for each make, type and rating	
(xxviii)	End plate for Power and Control terminal block	2 sets for each make, type and rating	
(xxix)	Energy meter	1 no for each make, type and rating	
(xxx)	Relays (Other than numerical relay):		
(a)	Conventional (Electromagnetic/Static type) Relay	2 no for each make, type and rating	
(b)	Aux. relays & Lock out relays & TIMERS	2 nos for each make, type and rating	
(xxxi)	MCCB Status (On/off) Monitoring Switch/Contact	2 nos for each make, type and rating	

(xxxii)	Push Button (On/Off) Complete Assembly	2 nos for each make, type and rating	
(xxxiii)	Annunciation Facia with lamps complete set (if applicable)	1 set for each make, type and rating	
7.15.00	**Cable**		
7.15.01	11KV Grade HT Power Cable	2 (Two) Kms. of each type, size & rating of Cables	
7.15.02	3.3KV Grade HT Power Cable	2 (Two) Kms. of each type, size & rating of Cables	
7.15.03	LT Power Cable	2(Two)Kms of each type, size & rating of Cables	
7.15.04	Control Cable	2(Two)Kms. of each type, size & rating of Cables	
7.15.05	Fire Survival Cable	1(One)Km of each type, size & rating of Cables	
7.18.00	**220V DC System**		
7.18.01	**Battery (For each make, Type and Rating)**		
(i)	Hydrameter	2 Nos. of each type	220V Battery for Switchyard
(ii)	Vent plugs	5 Nos. of each type	
(iii)	Inter-cell, connector	5 Nos. of each type	
(iv)	Set of nuts, bolts and washer	5 Nos. of each type	
(v)	Insulated socket spanner with handle	2 Nos. of each type	
(vi)	Thermometer	2 Nos. of each type	
(vii)	Rubber gloves	1pair	
(viii)	Voltmeter for measuring cell voltage (Center zero type)	1No.	
7.18.02	**Float -cum- Boost Charger (For each make, Type and Rating)**		
(i)	Electronic Module, PCB, Cards of each type and rating (with all components mounted)	2 Set	Battery Charger for Switchyard
(ii)	Fuses of each type and rating	100% of total quantity.	
(iii)	SCR of each type and rating	2 Nos.	
(iv)	Blocking Diode of each type and rating	5 Nos. of each type	
(v)	Potentiometer of each type and rating	1 Set	
(vi)	Pulse transformer	1 Set of each type	
(vii)	Main and Aux. transformer	1 no of each type and rating	
(viii)	Capacitor	2 no of each type and rating	
(ix)	Meters	1 No of each type	
(x)	Transducer	1 No of each type	
(xi)	Selector Switch	1 no of each type	
(xii)	Control Switch	1 no of each type	
(xiii)	Current transformer(if applicable)	1 no of each type and rating	
(xiv)	Push button complete set	1 no of each type	
(xv)	Annunciation window	1No.	
(xvi)	Indicating Lamps complete assembly	2 Nos of each type.	

DETAILS FOR FIRE-PROOF CABLE PENETRATION SEALING SYSTEM

1.00.00 General

1.01.00 The Fire proof sealing, fire stop system and fire protection coating system are required to prevent spreading of fire from one place to other place (or one zone to other zone) through the openings in wall / floor, cables laid in trays / racks and openings below Electrical Switchgear, MCC, DB,/ Cabinets, Panels etc.

1.02.00 The fire-proof cable penetration (FPCP) sealing system shall conform to the requirement of BS: 476 Part 20 (latest edition with all amendments).

2.00.00 Scope of Work

The scope of work includes but is not limited to the following items of supply and installation:

i) Fire Stops in wall and floors

ii) Fire stops below switchgear, MCC, Switchboards, DBs, junction boxes / panels / cabinets, etc. which are floor mounted type

iii) Fire retardant coating to be applied for installed cables

iv) Fire proof barrier walls

v) Fire proof doors

vi) Minor civil and structural works for installation of the entire work

vii) Necessary erection materials, consumables and sundry items to complete the work for satisfactory and trouble free operation

viii) Any special tools & tackles

ix) Conducting the type test of fire proof sealing system in presence of Owner's Engineers

x) All relevant Drawings, Data sheets and instruction manuals

3.00.00 Design Criteria

3.01.00 Fire Proof Cable Penetration Sealing System

The material / components used for fire-proof sealing (FPCP) system shall be provided to meet the following requirements:

i) The product shall be age tested for not less than 30 years.

ii) Shall be free from shrinkage or cracking; should achieve smoke and gas tightness during fire and should be modifiable.

iii) Not to generate toxic or corrosive gas and cause harm to the personnel handling the system.

iv) Prohibition of production of acid or alkali during gas generation.

v) Shall be repellant to pest / rodent / termite.

vi) Expansion co-efficient - very low which is to be comparable with masonry concrete.

vii) Not soluble / reactive to acid, water, alkali.

viii) Thermal conductivity - low.

ix) The material in contact with the cables in the FPCP sealing system shall be compatible with the material used for outer sheath of cables.

x) It should not have any adverse effect on the cables and should not alter the current carrying capacity of the cables.

xi) Retrofit in design to accommodate not less than 15% more addition of cables depending upon the size of cables, physically and chemically stable.

xii) Capable of withstanding vibrations, drop-loads, foot traffics, mechanical loads, etc.

xiii) The sealing system shall maintain its integrity and perform satisfactorily even after

a. Remaining in water for a long time.

b. Accelerated thermal aging.

c. Sustaining vibrations.

xiv) The design and construction of FPCP sealing system shall specifically take into account the fact that under seismic disturbances, normal load, short circuit and fire conditions, the cable / cable trays will be subject to movement, expansion and oscillation and this shall not result in any damage or cause dislocation of the FPCP sealing system or the material constituting the FPCP sealing System.

xv) Non-hygroscopic, non-inflammable and shall not get affected over a period of time due to humidity, moisture and ozone etc. and should not

contain volatile solvents which may cause a fire hazard during application.

xvi) The fire sealing system to be installed at floor openings below C&I panels, control panels/boards etc. in Central Electrical Room, Central Control Room, Central Electronic Room shall have a fire rating of not less than two (2) hours. The fire sealing system to be installed at all other places like the rest of the wall and floor crossings of cables/cable trays, openings below Switchgears/Boards etc. shall have a fire rating of one (1) hour. The system shall be stable after application of water jet in the exposed side in order to extinguish fire.

3.02.00 Fire Protection coating to be applied on installed cables:

A. The cables shall be coated with fire protection material of 2 mm dry thickness at the strategic locations as follows so as to limit the spread of fire:

i) At fire stops in walls and floors on either side upto 500 mm length.

ii) At fire stop below Electrical Switchgears/ MCCs/ Panels/ Cabins, etc. on one side coating of 500 mm length, i.e., on the cable vault side / cable trench side.

iii) Length of 500 mm on all sides of the junction/crossing of cabling work in open cable routes/ cable trench.

iv) In fire risk areas and where specified at suitable intervals as decided upon side conditions in open cable routes.

v) Where necessary and specified at site intervals along cable routes in cable trenches.

vi) The coating shall be applied evenly on the cables only.

B. The fire protection coating shall have the following properties/composition:

i) Asbestos-free, non-volatile, not eatable by vermin, harmless and non-irritant to human skin.

ii) Not affecting the current carrying capacity of the cables and the properties of the installed cables.

iii) It shall delay fire damage to cables and prevent flame spreading meeting the requirement of IEC - 332.

iv) Coating material shall show no signs of cracking and peeling when the coated cable is bent to the radius of minimum 12 times the diameter of the maximum size cable at 180°C.

v) The limiting oxygen index of the material shall not be less than 60% as per ASTMD - 2863.

vi) Life expectancy equivalent to the cable installations.

3.03.00 The various openings in the cable vault, vertical, horizontal raceways of cables penetrating walls, floors and the bottom of Electrical switchgears, MCCs, distribution boards, Cabinets, Panels shall be provided with fire stop systems. Cables passing through the openings at various locations are laid on various tiers of the cable trays/ racks in the bunch formation. Bidder shall visit the site to assess and get acquainted with the type of cable installation where fire stops and fire protection coating are to be provided. In case steel frames are required to be fabricated and fixed in the openings, the fabrication of frame & fixing of the same shall have to be done by the Contractor without any extra cost. The necessary steel section for fabrication of frames shall be supplied by the Contractor without any extra cost. Any civil works required to be done in the openings shall be carried out by the Bidder. Bidder shall also include one set of tools & accessories required for addition or removal of cables after the seal is made.

3.04.00 The bidder shall quote the unit rates for provision of supply, installation, testing & commissioning of the fire proof seals as given in the specification. Bidder is requested to quote the unit rates per square metre (i.e., area) basis of the area of the fire sealing material.

4.00.00 Type Test on Penetration Seals

4.01.00 The type tests for fire proof/ penetration seal for floor and wall opening/ fire stop system for bottom of electrical switchgear/ MCC/ panel base are as under:

i) Fire rating test

ii) Hose Stream test

iii) Accelerated aging test

iv) Fire rating test on the penetration seal system built out of accelerated aged components followed by hose stream test

v) Temp. rise test for cable in the fire stop

vi) Water absorption test followed by fire rating test

vii) Flame Resistance test for fire retardant coating material

viii) Anti-rodent test

4.02.00 Fire Rating Test

This test shall be carried out to prove the guaranteed power rating duration of the system in respect of stability, integrity and insulation characteristics of the complete system. The penetration seal system as a whole conforming to ASTM 814 and as per BS:476 Part-8 shall be built with the necessary component. The fire test shall be built with the necessary component.

The test specimen of the penetration seal built with 9-10 nos. armoured cables of various sizes passing through the seal shall be fitted to the gas fired furnace and shall form the upper most face of the furnace. The gas fired furnace shall have provision to achieve standard time temperature characteristics for fire tests as mentioned in BS-476 Part-8, according to which the temperature required to be maintained are as under:

Heating time (minute)	30	90	120	150	180	210	240
Furnace temp (°C)	821	886	1029	1062	1090	1113	1133

The pressure inside the furnace at the time of test shall be more than 2 mm water gauge. The penetration shall be subjected to fire test with surface exposed to controlled fire in the furnace conforming to time / temperature characteristics as mentioned above. During the test, temperatures of both the faces of the penetration seal i.e. one which is exposed to fire and the other unexposed, shall be measured by calibrated thermocouples after regular interval of 5 minutes. At least 3 thermocouples shall be provided for temperature measurement of each face.

4.03.00 The results at the end of the tests shall be interpreted or failure criteria as under:

i) The system is deemed to have failed to maintain stability if there is a total collapse of the penetration seal.

ii) In case cracks are seen on the face of the penetration seal or cracks through the seal system through which the flame / or gas can pass, the system is deemed to have failed to maintain integrity. The development of crack is characterized by ignition cotton wool held near the seal on the unexposed surface at a distance of about 30 mm from the aperture.

iii) In case the mean temperature rise of unexposed surface of seal exceeds 140°C above the initial temperature or temperature of unexposed surface exceeds 180°C, the system shall deemed to have failed in respect of insulation characteristics.

iv) Temperature measurement on the unexposed side of the penetration seal specimen shall be measured by the thermocouple on the surface of penetrating items and on fire stop material in accordance with ATME-814/UL 1479 at a distance of 25 mm from fire stop material and penetration items respectively.

4.04.00 Hose Stream Test:

The intention of the hose stream test is to ascertain whether the penetration seal assembly maintains its stability on application of water jet after withstanding the fire for 3 hours i.e. the guaranteed fire rating duration.

The test apparatus for this test shall be similar to the one used for carrying out the fire rating test. The penetration seal system shall be subjected to the action of hose stream at the nozzle pressure of 30 psi supplied for a duration of 1.5 sec./ sq.ft.. of exposed area. The hose stream shall be applied with 1.1/ 8" dia. nozzle at a perpendicular distance of approximately 17 ft. from the centre of the assembly on a line approximately 270 deg. from the line normal to the centre for the test assembly. The water stream shall be applied within 4 minutes and 30 seconds after completion of fire rating test.

However, this period shall not exceed more than 10 minutes in case of practical difficulties experienced by testing stations. The application of water stream shall be maintained throughout the test duration and shall traverse the complete fire stop system.

The fire stop assembly is deemed to have passed the hose stream test successfully if no through projection of water is noticed on the unexposed surface of the seal. Further on completion of hose stream test, the appearance of the penetration seal system shall not alter substantially indicating thereby that the stability of the system has been maintained.

4.05.00 Accelerated aging test

The intention of accelerated aging test is to ascertain whether the artificial aging of the systems and components thereof results into change in the mechanical properties or in the form. In order to simulate aging, artificial aging shall be resorted to.

For the purpose of subjecting the penetrations seal system components to accelerated aging, the system / components shall be stored for 336 hours in air furnace where the temperature of the inside air, shall be maintained at 100° C. However, for system components in pliable form, system component shall be stored for 448 hours in air furnace where temp. of air inside the furnace shall be maintained at 75° C. It is assumed that the changes occurring during test period would roughly correspond to the effect on aging over a period of about 40 years.

After completion of 336 hours / 448 hours, the mechanical properties such as tensile strength element, elongation and hardness of the material (as may be applicable) shall be tested. These results shall be compared with corresponding values before subjecting to accelerated aging test.

The change in the form of system / components shall also be compared with the form before the tests to ascertain whether the system / components thereof have undergone any permanent change.

In case the mechanical properties before and after the accelerated aging do not indicate substantial change, the system shall be deemed to have passed the accelerated aging test. Similarly the variation in the form of the system components at the end of the test shall not indicate permanent deformation which is likely to affect the ceiling properties of the system.

4.06.00 Fire Rating test After Accelerated Aging:

Intention to this test is to ascertain whether the penetration seal built out of components already subjected to accelerated aging still passes the fire rating test for guaranteed fire rating duration.

The test apparatus for this test shall be similar to the one used for fire rating test mentioned above. The assembly or the penetration seal shall be carried out with the components which were subjected to accelerated aging test based on the test procedure mentioned above. In case there is a problem of co-ordination with the test station, the prototype assembly may be subjected to aging in manufacturer's works under the conditions mentioned above and live fire test should be carried out at manufacturer's works in presence of Owner's representative.

In live fire test, the temperature of fire shall be of the order of 1000° C at the end of 3 hours. The test shall be carried out at atmospheric pressure.

The interpretation of test results for failure shall be similar to those mentioned under fire rating test/live fire test above.

4.07.00 Temperature rise test for cable in the fire stop:

This test shall be carried out to ascertain whether due to inadequate dissipation of heat at the location of fire stop, the temperature of cable conductor or outer sheath in contact with the fire stop, rises beyond the acceptable limits due to which whether any derating is required for cables.

Fire stop systems shall be erected with, at least 8-10 armoured cables, specially power cables. While laying the cable through penetration seal, thermocouple shall be placed on the outer surface of cable in contact with the fire stop system. The location shall be selected where there exists possibility of inadequate dissipation of heat from cables to the atmosphere due to fire stop components. Two thermocouples shall also be located on the two surfaces of the fire penetration seal system. Similarly thermocouples shall also be placed on the other surface of cables where there exists contact of free air without any obstruction so as to enable adequate nature cooling.

In case the temperature of outer surface of the cable in contact or inside the fire stop system does not exceed 75° C, it is inferred that no derating of cable is required for cable when used in conjunction with the particular fire stop system.

Test shall be repeated with reduced current till the temperature of cable outer surface in contact with fire stop system is limited to 75°C. The rate of the current so guaranteed by the cable manufacturer as free air rating shall be the derating factor.

4.08.00 Water Absorption Test:

The test specimen shall be immersed in fresh clean water at a temp. of 20°C. The test specimen must be separated from the bottom and sides of the soak tank by at least 10 mm and it shall be covered by approximately 25 mm of water. At the end of the 24 hours soak period, the specimen shall be removed from the water and moped up with a damp cloth.

Fire rating test after water absorption is to ascertain whether the penetration seal subjected to water absorption still passes the fire rating test for guaranteed fire rating duration.

Test apparatus for this test shall be similar to the one used for fire rating test. In case there is problem of coordination with test stations, the prototype assembly may be subject to water absorption test at manufacturer's works followed by live fire test which should be carried out at manufacturer's works in presence of Owner's representative. In line fire test, the temperature of furnace shall be of the order of 1000°C at the end of 3 hours. The test shall be carried out at atmospheric pressure.

4.09.00 Flame Resistance Test for fire Retardant Coating Material:

Sample strips shall be of ½ " wide, 12" long and approximately 70 mills in thick (without any reinforcement). Each strip shall be held vertically (clamped at the top) in a natural gas burner flame, (blue cone of flame touching bottom edge of sample) for 10 minutes. The flame shall then be removed and observation shall be recorded. In case, any flaming of the samples should cease after the removal of gas burner. White charred length of the sample should not exceed 1 & ½".

4.10.00 Anti-Rodent Test:

Physical tests:

a) This test shall be carried out to ascertain the anti-rodent properties of the components of the Fire proof sealing system.

b) This test shall be carried out at approved test station performing sealing system tests on pharmaceutical products. The complete Fire Proof sealing system shall be subjected to attack of inspect / vermin such as rate for about 20 days.

c) At the end of the test condition of the surface of Fire Proof sealing system the test material shall be compared with the surface condition before commencement of the test. The fire stop shall be deemed to have passed this test in case no marks of growth are seen on the surface.

5.00.00 Test Certificates

5.01.00 Certified copies of all tests carried out at works and at site shall be furnished in requisite number of copies.

5.02.00 Test reports shall be complete with all details and shall also contain limit valves specified in the relevant standards, wherever applicable, to facilitate review of Test Report/ Certificates.

5.03.00 The fire proof sealing system shall be installed only after receipt of approval of the test reports.